OPERATION AND INSTALLATION

Air | water heat pump

» HPA-O 3 CS Plus
» HPA-O 4 CS Plus
» HPA-O 6 CS Plus
» HPA-O 8 CS Plus

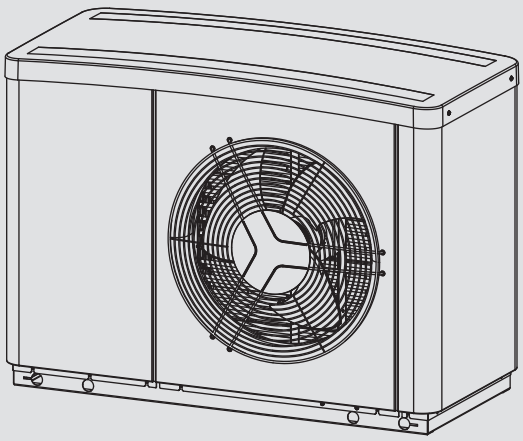

STIEBEL ELTRON

CONTENTS

SPECIAL INFORMATION

OPERATION

1. General information 3
1.1 Other relevant documents 3
1.2 Safety instructions 3
1.3 Other symbols in this documentation 4
1.4 Units of measurement 4
1.5 Standardised output data 4
2. Safety 4
2.1 Intended use 4
2.2 Safety instructions 4
3. Appliance description 5
3.1 Minimum software versions 5
3.2 Operational characteristics 5
3.3 Function 5
4. Settings 6
5. Maintenance and care 6
6. Troubleshooting 6

INSTALLATION

7. Safety 7
7.1 General safety instructions 7
7.2 Instructions, standards and regulations 7
8. Appliance description 7
8.1 Standard delivery 7
8.2 Accessories 7
9. Preparations 7
9.1 Sound emissions 7
9.2 Minimum clearances 8
9.3 Preparation of the installation location 8
9.4 Installing the supply lines 10
9.5 WPM heat pump manager 10
9.6 Buffer cylinder 10
9.7 Preparing the electrical installation 11
10. Installation 11
10.1 Transport 11
10.2 Siting 11
10.3 Flow and return connection 12
10.4 Fitting the push-fit connectors 12
10.5 Heating water connection 13
10.6 Oxygen diffusion 13
10.7 Filling the heating system 13
10.8 Minimum flow rate 13
10.9 Setting the flow rate on the heating side 14
10.10 External second heat source 14
10.11 High limit safety cut-out for area heating system 14
11. Electrical connection 15
11.1 Terminal area 15
12. Commissioning 16
12.1 Checks before commissioning 16
12.2 Operation with an external second heat source 16
12.3 Initial start-up 16
13. Settings 17
13.1 Silent mode 17
14. Shutdown 18
14.1 Standby mode 18
14.2 Power interruption 18
15. Maintenance 18
16. Troubleshooting 18
16.1 Checking the IWS DIP switch settings 18
16.2 LEDs (IWS) 20
16.3 Reset button 20
16.4 Fan noise 20
17. Specification 21
17.1 Dimensions and connections 21
17.2 Wiring diagram 22
17.3 Application limit 24
17.4 Output diagrams HPA-O 3 CS Plus 25
17.5 Output diagrams HPA-O 4 CS Plus 26
17.6 Output diagrams HPA-O 6 CS Plus 27
17.7 Output diagrams HPA-O 8 CS Plus 29
17.8 Data table 30

GUARANTEE

ENVIRONMENT AND RECYCLING

SPECIAL INFORMATION OPERATION

- The appliance may be used by children aged 8 and older and persons with reduced physical, sensory or mental capabilities or a lack of experience and know-how, provided that they are supervised or they have been instructed on how to use the appliance safely and have understood the resulting risks. Children must never play with the appliance. Children must never clean the appliance or perform user maintenance unless they are supervised.
- The connection to the power supply must be in the form of a permanent connection. Ensure the appliance can be separated from the power supply by an isolator that disconnects all poles with at least 3 mm contact separation.
- Maintain the minimum clearances to ensure trouble-free operation of the appliance and facilitate maintenance work.
- Maintenance work, such as checking the electrical safety, must only be carried out by a qualified contractor.
- We recommend regular inspection (to establish the current condition of the system), and maintenance by a qualified contractor if required (to return the system to its original condition).
- Following disconnection from the power supply, parts of the appliance may remain energised for 2 minutes until the inverter capacitors have discharged.
- Never interrupt the heat pump power supply, even outside the heating season. Otherwise, system frost protection is not guaranteed.
- If the heat pump and frost protection are completely switched off, drain the system on the water side.

1. General information

The chapters "Special Information" and "Operation" are intended for both the user and qualified contractors.

The chapter "Installation" is intended for qualified contractors.

Note
Read these instructions carefully before using the appliance and retain them for future reference.
Pass these instructions on to a new user if required.

1.1 Other relevant documents

- Instructions for the WPM heat pump manager
- Operating and installation instructions for connected indoor unit
- Operating and installation instructions for mounting bracket used
- Operating and installation instructions for system components
- Commissioning checklist for heat pump

1.2 Safety instructions

1.2.1 Structure of safety instructions

KEYWORD Type of risk
Here, possible consequences are listed that may result from failure to observe the safety instructions.
▶ Steps to prevent the risk are listed.

1.2.2 Symbols, type of risk

Symbol	Type of risk
	Injury
	Electrocution

1.2.3 Keywords

KEYWORD	Meaning
DANGER	Failure to observe this information will result in serious injury or death.
WARNING	Failure to observe this information may result in serious injury or death.
CAUTION	Failure to observe this information may result in non-serious or minor injury.

1.3 Other symbols in this documentation

Note
General information is identified by the adjacent symbol.
▶ Read these texts carefully.

Symbol	Meaning
	Material losses (appliance damage, consequential losses and environmental pollution)
	Appliance disposal

▶ This symbol indicates that you have to do something. The action you need to take is described step by step.

1.4 Units of measurement

Note
All measurements are given in mm unless stated otherwise.

1.5 Standardised output data

Explanations to determine and interpret the specified standardised output data.

1.5.1 EN 14511

The output data specifically mentioned in text, diagrams and technical datasheets has been calculated according to the test conditions of the standard shown in the heading of this section. However, there is a deviation from this norm in the output data for air/water inverter heat pumps at source temperatures of > -7 °C as this concerns partial load values. The associated percentage weighting in the partial load range can be found in EN 14825 and EHPA quality label regulations.

Generally, the test conditions stated above will not fully meet the conditions found at the installation site of the system user.

Depending on the chosen test method and the extent to which this method deviates from the test conditions defined in the first paragraph of this section, any deviations can have a considerable impact.

Further factors that have an influence on the test values are the measuring equipment, the system configuration, the age of the system and the flow rates.

A confirmation of the specified output data can only be obtained if the test conducted for this purpose is also performed in accordance with the test conditions defined in the first paragraph of this section.

2. Safety

2.1 Intended use

The appliance is designed for room heating and cooling within the application limits given in the specification.

This appliance is intended for domestic use. It can be used safely by untrained persons. The appliance can also be used in non-domestic environments, e.g. in small businesses, as long as it is used in the same way.

Any other use beyond that described shall be deemed inappropriate. Observation of these instructions and of instructions for any accessories used is also part of the correct use of this appliance.

2.2 Safety instructions

Observe the following safety instructions and regulations.

- Only qualified contractors may carry out the electrical work and installation of this appliance.
- The qualified contractor is responsible for adherence to all currently applicable regulations during installation and commissioning.
- Operate the appliance only when fully installed and with all safety equipment fitted.
- Protect the appliance from dust and dirt ingress during building work.

WARNING Injury
The appliance may be used by children over 8 years of age and persons with reduced physical, sensory or mental capabilities or a lack of experience and expertise, provided that they are supervised or they have been instructed on how to use the appliance safely and have understood the potential risks. Children must never play with the appliance. Children must never clean the appliance or perform user maintenance unless they are supervised.

WARNING Injury
▶ For safety reasons, only operate the appliance with the casing closed.

3. Appliance description

3.1 Minimum software versions

The following minimum software versions are required for operating the heat pump:

HPA-O 3 CS Plus | HPA-O 4 CS Plus | HPA-O 8 CS Plus

- WPM: 390.09
- MFG: V.14
- FES: 417.05

HPA-O 6 CS Plus

- WPM: 390.12
- MFG: V.14
- FES: 417.07

3.2 Operational characteristics

The appliance is an air | water heat pump that operates as a heating heat pump for outdoor installation. Heat is extracted from the outdoor air at a low temperature level, and is then transferred to the heating water at a higher temperature. The heating water can be heated up to a flow temperature of 60 °C.

This appliance has further operational characteristics:

- Suitable for underfloor heating systems.
- Preferred for low temperature heating systems.
- Extracts heat from the outdoor air even at outside temperatures of -20 °C.
- Corrosion-protected, external casing made from hot-dipped galvanised sheet steel plus stove-enamelled finish.
- Filled with non-combustible safety refrigerant.

Note
The appliance may only be used in conjunction with the following products:
- Hydraulic module HM(S) (Trend) (BE)
- Cylinder and hydraulic module HSBB 200 (S) (BE)
- Integral cylinder HSBC 200 (S) (BE)

3.3 Function

3.3.1 Heating

Heat is extracted from the outdoor air via the heat exchanger (evaporator) on the air side. The evaporated refrigerant is compressed by a compressor. This process requires electrical energy. At this point, the refrigerant is at a higher temperature level. A further heat exchanger (condenser) transfers the heat to the heating circuit. The refrigerant then expands again and the cycle restarts from the beginning.

At air temperatures below approx. 7 °C, the humidity in the air condenses as hoarfrost on the evaporator fins. Any hoarfrost is automatically defrosted. The resulting water flows out of the appliance via the free condensate drain and seeps away into the gravel bed.

Material losses
In the defrost cycle, the fan is switched off and the heat pump circuit is reversed. The heat required for defrosting is drawn from the buffer cylinder. For operation without a buffer cylinder, observe chapter “Menu / Menu description / SETTINGS / HEATING / STANDARD SETTING / BUFFER OPERATION” in the WPM installation instructions. This prevents damage to the heat pump as a result of unfavourable conditions.

Note
In winter, icicles can form on the bottom of the condensate drain. This does not interfere with the operation of the appliance, provided the condensate can drain off unimpeded.

The heat pump automatically reverts to heating mode at the end of the defrost cycle.

Material losses
In dual mode operation, return water from the second heat source may flow through the heat pump. Please note that the return temperature must be no higher than 60 °C.

3.3.2 Cooling

Material losses
The heat pump is not suitable for continuous, year-round cooling.
▶ Observe the application limits (see chapter "Specification / Data table").

Material losses
In cooling mode, condensate can form when the dew point temperature is undershot.
▶ Take suitable measures to prevent the formation of condensate.

Note
The HM(S) (Trend) (BE) is equipped for both area and fan cooling.
The HSBB 200 (S) (BE) and HSBC 200 (S) (BE) can provide area cooling.

Rooms are cooled by reversing the heat pump circuit. Heat is extracted from the heating water. The evaporator transfers this heat to the outdoor air.

Area cooling requires the installation of the FET remote control unit in a reference room to capture the relative humidity and the room temperature as part of dew point monitoring.

Fan cooling requires the installation of the FE 7 / FET remote control unit in a reference room to capture the room temperature. In addition, a buffer cylinder needs to be installed.

Heat pump application limit

The heat pump is switched off if the outside temperature falls below the selected lower application limit for cooling (LIMIT COOLING parameter).

4. Settings

The system is operated exclusively with the WPM heat pump manager. The heat pump manager is installed in the products required as accessories (see chapter “Installation / Appliance description / Accessories”).

▶ Please observe the instructions for the heat pump manager.

5. Maintenance and care

Material losses
Maintenance work, such as checking the electrical safety, may only be carried out by a qualified contractor.

A damp cloth is sufficient for cleaning all plastic and sheet metal parts. Never use abrasive or corrosive cleaning agents.

▶ Protect the appliance from dust and dirt ingress during building work.

Material losses
Keep the air discharge and intake apertures free from snow and leaves.

We recommend regular inspection (to establish the current condition of the system), and maintenance by a qualified contractor if required (to return the system to its original condition).

6. Troubleshooting

Fault	Cause	Remedy
There is no hot water or the heating system stays cold.	No power at the appliance.	Check the fuses/MCBs in your fuse box/distribution panel. Replace the fuses/reset the MCBs if required. Notify your qualified contractor if the fuses/MCBs blow/trip again.
Condensate collects on the outside of the appliance and on the air grille.	The heat pump is extracting heat from the outdoor air to heat the building. This can cause the humidity in the outdoor air to accumulate as dew or frost on the cooled heat pump casing. This is not a defect.	
The fan runs when the compressor is switched off.	At outside temperatures below 10 °C, the fan is regularly started at the lowest speed when the compressor is idle. This prevents the evaporator and fan from freezing or icing up due to water draining off. At temperatures above the freezing point, the time between two defrost cycles is increased, thereby improving overall efficiency.	
The appliance produces rhythmic scraping or grinding noises.	Ice has formed on the air grille, on the fan blades or in the air routing.	Call your qualified contractor (see chapter “Installation / Troubleshooting / Fan noises”).

If you cannot remedy the fault, notify your qualified contractor. To facilitate and speed up your request, provide the number from the type plate. The type plate is located at the front top, on the right or left hand side of the casing.

Sample type plate

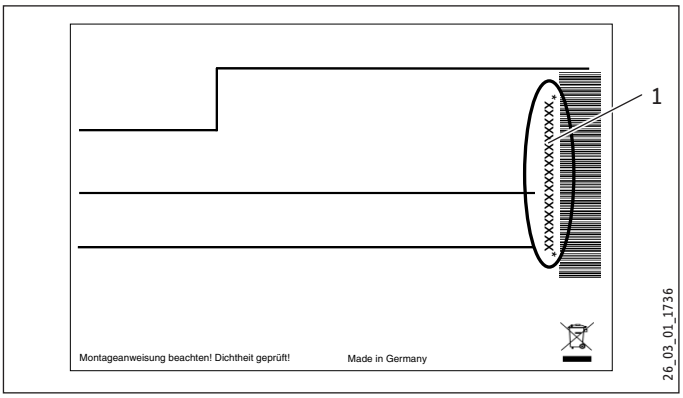

1 Number on the type plate

INSTALLATION

7. Safety

Only a qualified contractor should carry out installation, commissioning, maintenance and repair of the appliance.

7.1 General safety instructions

We guarantee trouble-free function and operational reliability only if original accessories and spare parts intended for the appliance are used.

7.2 Instructions, standards and regulations

Note
Observe all applicable national and regional regulations and instructions.

HPA-O 3 CS Plus | HPA-O 4 CS Plus

The tested appliance conforms to IEC 61000-3-3.

HPA-O 6 CS Plus | HPA-O 8 CS Plus

The tested appliance conforms to IEC 61000-3-12.

8. Appliance description

The appliance offers frost protection for the connection lines. The integral frost protection circuit starts the circulation pump in the heat pump circuit automatically at a condenser temperature of 8 °C, and thereby ensures circulation in all water-carrying sections. When the temperature in the buffer cylinder falls to below +5 °C, the heat pump is automatically started subject to the outside temperature.

8.1 Standard delivery

The following are delivered with the appliance:

- Wiring diagram

8.2 Accessories

8.2.1 Required accessories

- T-support SK 2 or wall mounting support WK 1

With integral emergency/booster heater

- Hydraulic module HM(S) (Trend), cylinder and hydraulic module HSBB 200 (S) or integral cylinder HSBC 200 (S)

Without integral emergency/booster heater

- Hydraulic module HMS Trend BE, cylinder and hydraulic module HSBB 200 S BE or integral cylinder HSBC 200 S BE

8.2.2 Further accessories

- Remote control for heating systems FET
- Remote control for heating systems FE7
- High limit safety cut-out for area heating system STB-FB
- Cover CH 1

9. Preparations

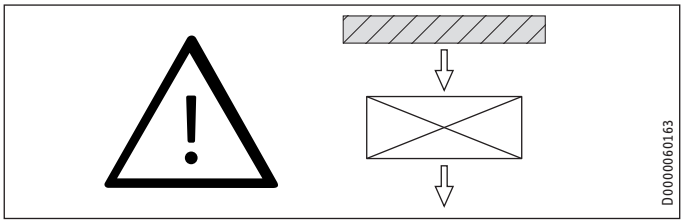

The appliance is designed for installation on a T-support or wall mounting support. Observe the minimum clearances. If the appliance is installed in an open space, protect the air intake side. Do this by erecting a wall to shield it against the wind. A gravel bed is an essential requirement for both installation versions.

9.1 Sound emissions

The appliance is louder on the air intake and air discharge sides than on the two enclosed sides. Observe the following information when selecting the installation location.

Note
For details regarding the sound power level, see chapter "Specification / Data table".

- Lawn areas and shrubs help reduce the spread of noise.
- Sound propagation can also be reduced by installing closely spaced palisade fencing around the appliance.

▶ Ensure that the air intake direction is the same as the dominant wind direction. Air should not be blown out against the wind.

▶ Ensure that the air intake and air discharge are never directed towards noise-sensitive rooms of the house, e.g. bedrooms, or neighbouring houses.

▶ Avoid installation between reflective building walls. Reflecting building walls can increase the noise level.

9.2 Minimum clearances

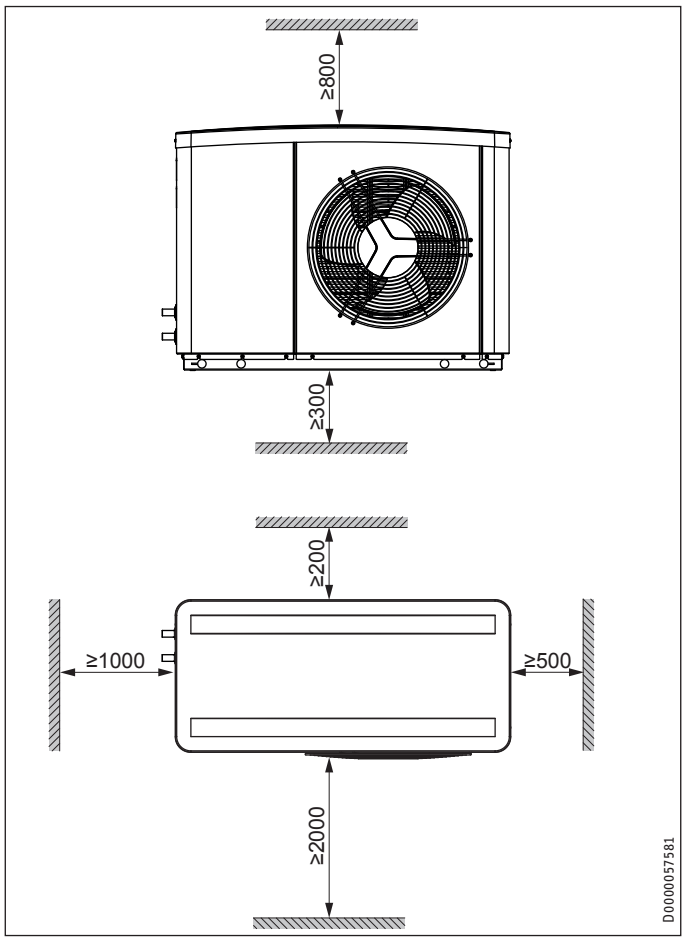

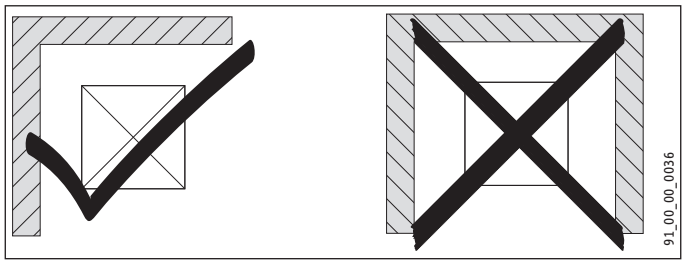

- ▶ Never install the appliance in a recess. Two sides of the appliance must remain exposed.
- ▶ Maintain the minimum clearances to ensure trouble-free operation of the appliance and facilitate maintenance work.

9.3 Preparation of the installation location

- ▶ Observe chapter "Sound emissions".
- ▶ Ensure that the appliance is accessible from all sides.

9.3.1 Condensate drain

WARNING Injury
At temperatures below freezing point, ice may form.
▶ Do not allow the gravel bed or surrounding area to slope downwards towards paths.

Material losses
The foundations of the building must have a damp proof membrane.

Note
▶ Never use grit for the gravel bed.

Example: Gravel bed under T-support SK 2

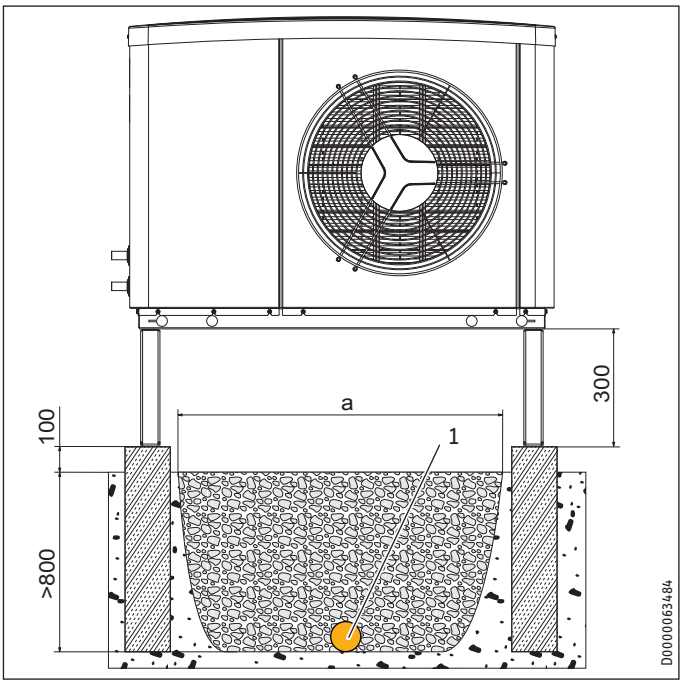

1 Drainage pipe

Heat pump	a
HPA-O 3 CS Plus	700
HPA-O 4 CS Plus	700
HPA-O 6 CS Plus	830
HPA-O 8 CS Plus	830

- ▶ Lay a drainage pipe under the appliance to drain moisture away from the building.
- ▶ Create a gravel bed below the condensate drain of the appliance.

Example: Gravel bed under wall mounting support WK 1

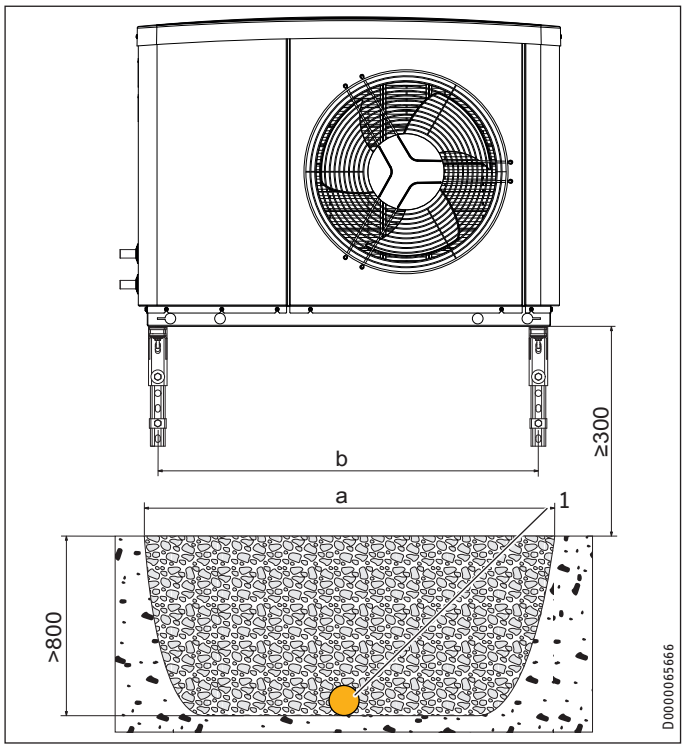

1 Drainage pipe

Heat pump	a	b
HPA-O 3 CS Plus	900	865
HPA-O 4 CS Plus	900	865
HPA-O 6 CS Plus	1000	995
HPA-O 8 CS Plus	1000	995

- ▶ Lay a drainage pipe under the appliance to drain moisture away from the building.
- ▶ Create a gravel bed below the condensate drain of the appliance.

9.3.2 Siting

Example: T-support SK 2

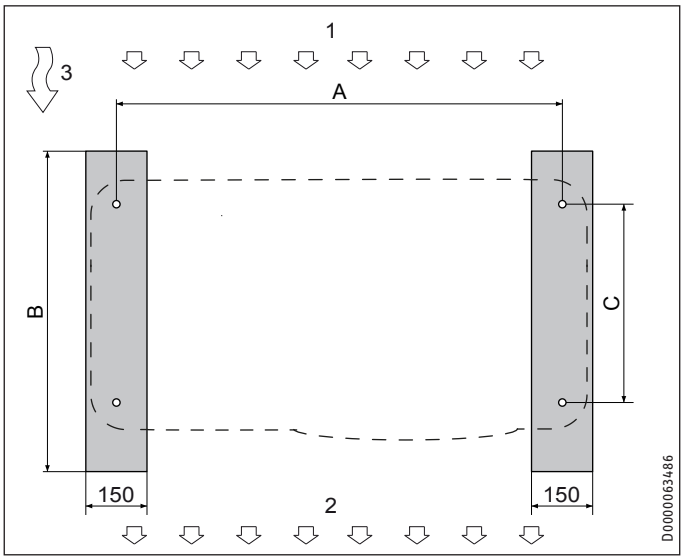

1 Air intake side
2 Air discharge side
3 Main wind direction

Heat pump	A	B	C
HPA-O 3 CS Plus	850	500	408
HPA-O 4 CS Plus	850	500	408
HPA-O 6 CS Plus	980	500	408
HPA-O 8 CS Plus	980	500	408

Material losses
The T-support may bend if the heat pump is subject to any lateral load.
- ▶ Do not exert any pressure on the sides of the heat pump.

- ▶ Observe the static limits of the T-support used.

To cover the supply lines, you can install a cover hood.

Note
You can install the cover hood either vertically or horizontally.
- ▶ Observe the installation instructions for the cover hood.

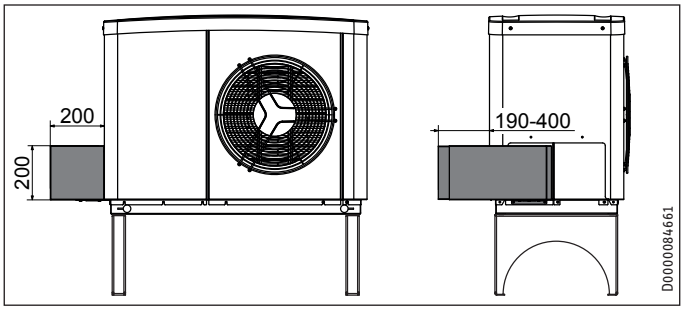

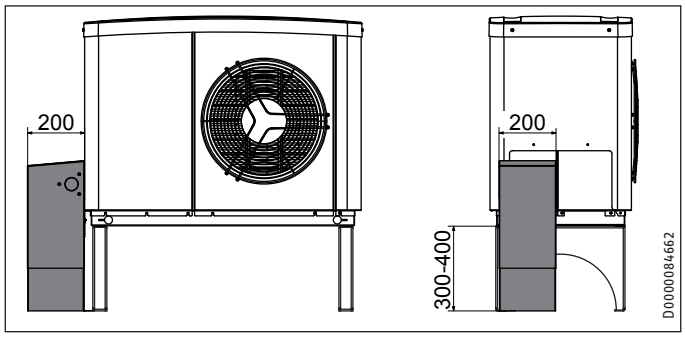

Example: Wall mounting support WK 1

Note
To prevent disturbance due to structure-borne noise transmission, never install the wall mounting support on the external walls of living areas or bedrooms.
- ▶ Install the wall mounting support on a garage wall, for example.

Note
Condensate drips from the appliance onto the floor.
- ▶ Observe the minimum clearance below the appliance (see chapter "Preparations / Minimum clearances").

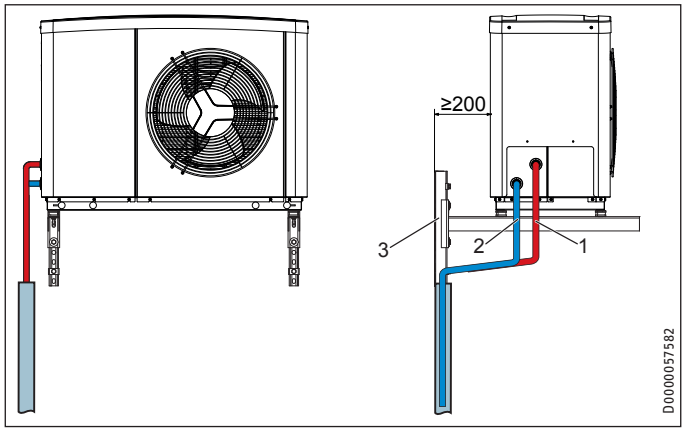

1 Heating flow
2 Heating return
3 Wall mounting support

▶ Observe the static limits of the wall mounting support used.

To cover the supply lines, you can install a cover hood.

▶ Observe the installation instructions for the cover hood.

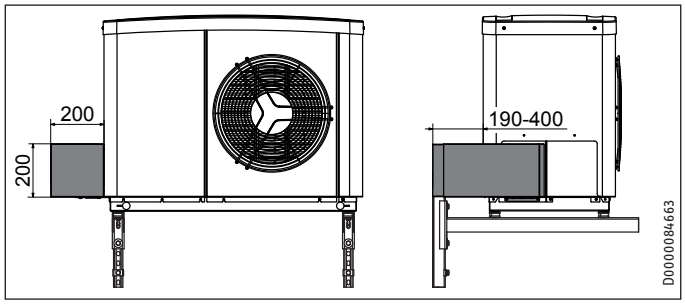

9.4 Installing the supply lines

The supply lines are all electric cables plus the heating flow and return lines.

- To facilitate connection to the appliance, we recommend using flexible supply pipes/cables in the case of outdoor installation.
- ▶ Use only weatherproof cables, e.g. NYY.
- ▶ Protect the flow and return lines against frost with sufficient thermal insulation. Provide thermal insulation in accordance with applicable regulations.
- ▶ Also protect all supply lines/cables against humidity, damage and UV radiation by means of a conduit.
- ▶ Protect all pipe fixings and external wall ducts with anti-vibration insulation.

9.5 WPM heat pump manager

A WPM heat pump manager is required to operate the appliance. This controls the entire heating system. The heat pump manager is installed in the products defined as required accessories (see chapter "Installation / Appliance description / Accessories").

9.6 Buffer cylinder

Material losses
A buffer cylinder with diffusion-proof insulation is essential to enable cooling by means of fan convectors. An emergency/booster heater must be connected.

Note
When providing cooling via an underfloor heating system no buffer cylinder is required.

A buffer cylinder is recommended to ensure trouble-free appliance operation.

The buffer cylinder provides hydraulic separation of the volume flows in the heat pump circuit and heating circuit, and also serves as an energy source for defrosting.

- ▶ When operating without a buffer cylinder, observe the details specified in chapter "Minimum flow rate with individual room control by means of FET / FE7 in systems without buffer cylinder".

Note
For operation without a buffer cylinder, we recommend installing an electric emergency/booster heater (DHC). An emergency/booster heater is installed in some of the products required as accessories (see chapter “Installation / Appliance description / Accessories”).
- ▶ If you do not install an emergency/booster heater, for fault-free operation activate the WW LEARNING FUNCTION parameter in the WPM heat pump manager.

9.7 Preparing the electrical installation

WARNING Electrocution
Carry out all electrical connection and installation work in accordance with national and regional regulations.

WARNING Electrocution
The connection to the power supply must be in the form of a permanent connection. Ensure the appliance can be separated from the power supply by an isolator that disconnects all poles with at least 3 mm contact separation. This requirement can be met by contactors, isolators, fuses, etc.

Material losses
The specified voltage must match the mains voltage.
▶ Observe the type plate.

Material losses
▶ Provide separate fuses for the two power circuits (for the appliance and the control unit).

Note
The appliance includes an inverter for the variable speed compressor. In case of a fault, inverters can cause DC residual currents. If RCDs are provided, they have to be type B AC/DC-sensitive.
A DC residual current can block type A RCDs.
▶ Make sure that the appliance power supply is disconnected from the fuse board/distribution panel.

The electrical data is provided in chapter “Specification”. You require a J-Y (St) 2x2x0.8 mm² cable as a BUS cable.

▶ Lay the relevant pipe cross-sections. Observe the applicable national and regional regulations.

HPA-O 3 CS Plus | HPA-O 4 CS Plus

Fuse protection	Assignment	Cable cross-section
1x B 16 A	Compressor (single phase)	2.5 mm² for routing through a wall 1.5 mm² when routing on a wall or in an electrical conduit on a wall
1x B 16 A	Control unit	1.5 mm²

HPA-O 6 CS Plus | HPA-O 8 CS Plus

Fuse protection	Assignment	Cable cross-section
1x B 25 A	Compressor (single phase)	4.0 mm² for routing through a wall 2.5 mm² when routing on a wall or in an electrical conduit on a wall
Alternative:		
1x B 16 A	Compressor (single phase)	4.0 mm² for routing through a wall 2.5 mm² when routing on a wall or in an electrical conduit on a wall
1x B 16 A	Control	1.5 mm²

▶ If you have selected a lower fuse protection for the compressor, you will need to limit the maximum power consumption. In the COMMISSIONING / COMPRESSOR menu, adjust the MAXIMUM CURRENT parameter. Observe the information in the commissioning instructions for the heat pump manager.

The cable cross-section must be designed for the maximum possible operating current of the appliance (see “Specification/Data table”).

10. Installation

10.1 Transport

Material losses
Protect the appliance against heavy impact during transport.

You can transport the appliance in various ways:

▶ When carrying, hold on to the narrow sides (transverse sides) under the base plate.

▶ Slide a robust pipe through the holes at the bottom of the appliance frame to create a handle.

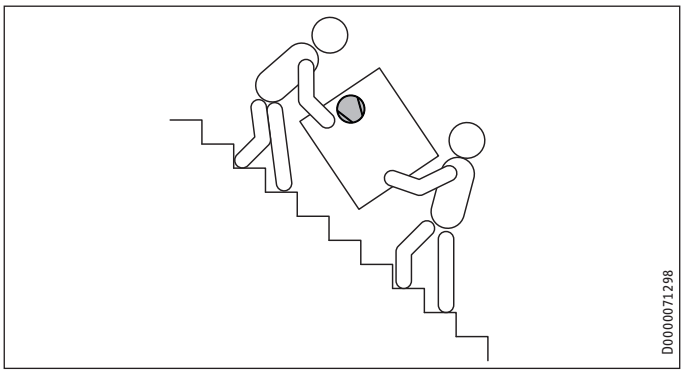

If the appliance needs to be tilted during transport only do so for a short time on one of its longitudinal sides. The longer the appliance is tilted, the greater the distribution of refrigerant oil in the system.

▶ Wait approx. 30 minutes before starting the appliance after it has been tilted.

10.2 Siting

▶ When siting the appliance, observe the air discharge direction (see chapter "Preparations / Sound emissions").

▶ Mount the appliance on the T-support or wall mounting support. Observe the installation instructions for the mounting bracket used.

10.3 Flow and return connection

Material losses
For cooling with fan convectors, the heating flow and heating return lines must be provided with vapour diffusion-proof insulation.

▶ Take the position of the heating flow and return from the following diagram:

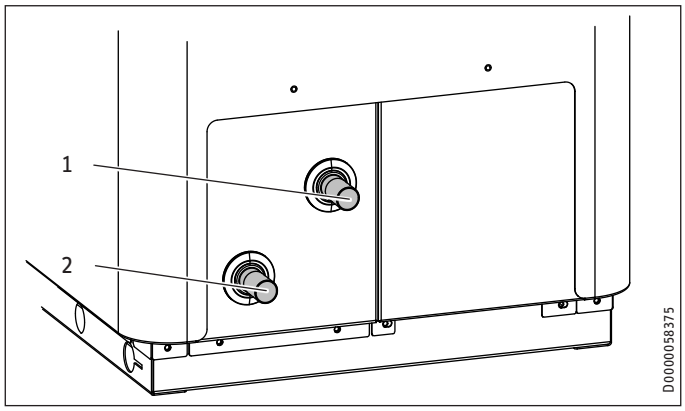

1 Heating flow
2 Heating return

▶ Connect the heat pump to the heating circuit. Check for tightness.

Cooling with a buffer cylinder

▶ Install an immersion/contact sensor in the heating flow, downstream of the buffer cylinder.

10.4 Fitting the push-fit connectors

Note
The plastic push-fit connectors are not suitable for installation in the DHW line or the solar circuit.
▶ Install the push-fit connectors only in the heating circuit.

Material losses
Tighten the screw cap of the push-fit connector by hand. Never use a tool.

Material losses
To ensure the push-fit connector is held securely, pipes with a surface hardness > 225 HV (e.g. stainless steel) must have a groove.
▶ Using a pipe cutter, cut a groove (depth approx. 0.1 mm) at a defined distance from the end of the pipe.
- Pipe diameter 22 mm: 17±0.5 mm
- Pipe diameter 28 mm: 27.5±0.5 mm

How the push-fit connectors work

The push-fit connectors are equipped with a retainer with stainless steel serrations and an O-ring for sealing. The push-fit connectors also have a “twist and secure” function. Simply turning the screw cap by hand will secure the pipe in the connector and push the O-ring against the pipe to seal it.

Making the push-fit connection

The connector must be in its relaxed position before the pipe is inserted. In this position, there is a small gap between the screw cap and main body.

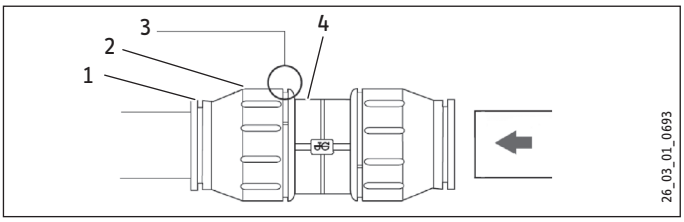

1 Retainer
2 Screw cap
3 Gap between screw cap and main body
4 Main body

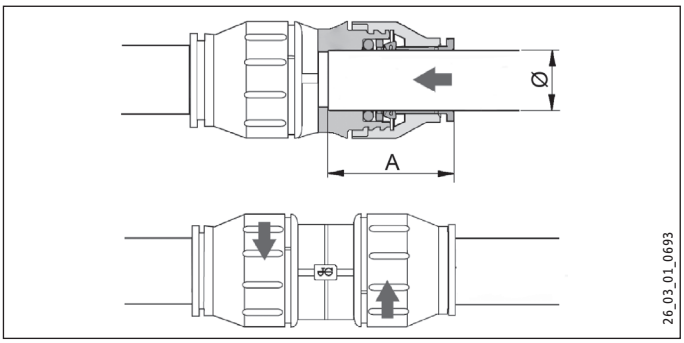

Pipe Ø	22 mm
Depth of insertion A	33.3 mm

Material losses
Pipe ends must be deburred.
▶ Always use a pipe cutter to trim pipes.

▶ Push the pipe through the O-ring into the push-fit connector until it reaches the prescribed insertion depth.

▶ Tighten the screw cap by hand against main body as far as it will go. This locks the push-fit connection.

Undoing the push-fit connection

If the push-fit connectors later need to be undone, proceed as follows:

▶ Turn the screw cap anti-clockwise until a there is a narrow gap of approx. 2 mm. Press the retainer back with your fingers and hold on to it.

▶ Pull out the inserted pipe.

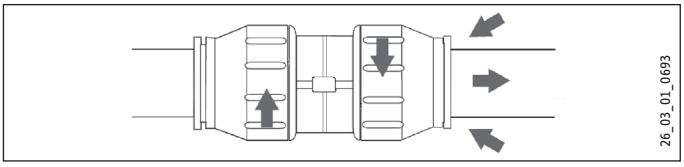

10.5 Heating water connection

The heat pump heating system must be connected by a qualified contractor in accordance with the water installation diagrams, which are part of the technical guides.

- ▶ Before connecting the heat pump, flush the pipework thoroughly with suitable water. Foreign bodies (e.g. welding pearls, rust, sand, sealant, etc.) can impair the operational reliability of the heat pump.
- ▶ Connect the heat pump on the heating water side. Check for tightness.
- ▶ Ensure that the heating flow and return are connected correctly.
- ▶ Provide thermal insulation in accordance with applicable regulations.
- ▶ When sizing the heating circuit, observe the internal pressure differential (see chapter “Specification / Data table”).

10.6 Oxygen diffusion

Material losses
Do not use open vented heating systems. Use oxygen diffusion-proof pipes in underfloor heating systems with plastic pipework.

In underfloor heating systems with plastic pipes that are permeable to oxygen and in open vented heating systems, oxygen diffusion may lead to corrosion on the steel components of the heating system (e.g. on the indirect coil of the DHW cylinder, on buffer cylinders, steel radiators or steel pipes).

- ▶ In the event of oxygenation, separate the heating system between the heating circuit and the buffer cylinder.

Material losses
The products of corrosion (e.g. rusty sludge) can settle in the heating system components and result in a lower output or fault shutdowns due to reduced cross-sections.

10.7 Filling the heating system

10.7.1 Water quality

Carry out a fill water analysis before the system is filled. This analysis may, for example, be requested from the relevant water supply utility.

To avoid damage as a result of scaling, it may be necessary to soften or desalinate the fill water. The fill water limits specified in chapter "Specification / Data table" must always be observed.

- ▶ Recheck these limits 8-12 weeks after commissioning, after every refill and as part of the annual system service.

Note
- ▶ Never add inhibitors or other additives to the fill water.

Note
The appliance offers frost protection for the connection lines in regular operation.
In the event of prolonged power failure or when shutting down, drain the DHW side of the appliance.
If it is not possible to detect power failures (for example if the system is in a holiday home left vacant for extended periods of time), the following protective measure can be taken.
- ▶ Add a suitable concentration of ethylene glycol to the fill water.
- ▶ Please note that antifreeze changes the density and viscosity of the fill water.

Note
With a conductivity >1000 µS/cm, desalination treatment is recommended in order to prevent corrosion.

Note
Suitable appliances for water softening, as well as for filling and flushing heating systems, can be obtained via trade suppliers.

10.7.2 Filling the heating system

- ▶ Fill the heating system on the heating side.

10.7.3 Venting the heating system

The appliance has an automatic air vent valve.

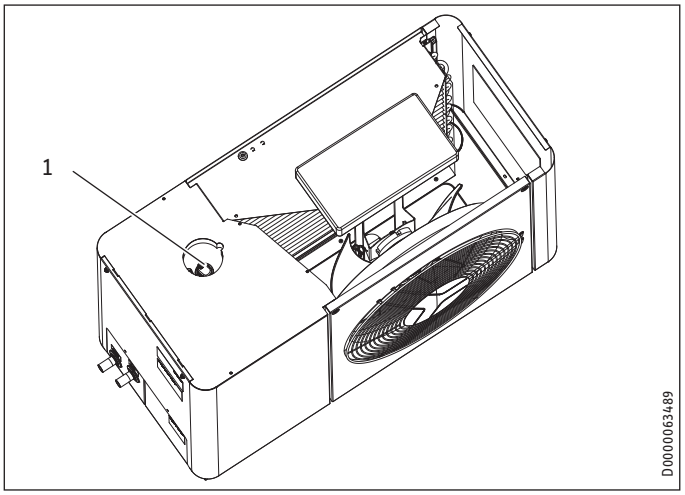

1 Automatic air vent valve

- ▶ Remove the hood and the EPS cover (see chapter "Troubleshooting / Checking the IWS DIP switch settings").
- ▶ Vent the pipework by turning the grey cap on the automatic air vent valve.
- ▶ Close the automatic air vent valve after the venting process.
- ▶ Reattach the EPS cover and hood on the appliance.

10.8 Minimum flow rate

The minimum flow rate and the defrost energy must always be assured (see chapter “Specification / Data table”).

10.9 Setting the flow rate on the heating side

Note
We recommend installing an electric emergency/booster heater.
An emergency/booster heater is installed in some of the products required as accessories (see chapter “Installation / Appliance description / Accessories”).

The flow rate is set automatically via the self-regulating system (see menu “COMMISSIONING / HEATING / SPREAD CONTROL / STANDBY PUMP RATE” in the heat pump manager).

In heat pump mode a fixed spread between the heat pump flow and return is set (see menu “COMMISSIONING / HEATING / SPREAD CONTROL” in the heat pump manager).

The appliance is designed in such a way that no buffer cylinder is required in conjunction with appropriately sized area heating systems.

Installations with several heating circuits require a buffer cylinder to be used.

Checking the flow rate

- ▶ Set parameter STANDBY PUMP RATE to 100 %.
- ▶ Set buffer operation to OFF.
- ▶ If no buffer cylinder is installed, close all controllable heating circuits.
- ▶ The current flow rate can be called up in the menu “INFO / HEAT PUMP / PROCESS DATA” under “WP WATER FLOW RATE”.
- ▶ Compare the value with the specification (see chapter “Specification / Data table”).
- ▶ If the specified flow rate is not met, take suitable measures to achieve the flow rate.
- ▶ If no buffer cylinder is installed, reopen all controllable heating circuits.
- ▶ Reset the parameters to their original values.

10.9.1 Minimum flow rate with individual room control by means of FET / FE7 in systems without buffer cylinder

In the case of systems without buffer cylinder, in the menu “SETTINGS / HEATING / STANDARD SETTING”, set parameter “BUFFER OPERATION” to “OFF”.

In such cases, one or more heating circuits in the heating system must be left open. Ensure the minimum flow rate (see “Specification / Data table”) by means of the correspondingly opened heating circuits (see table “Design recommendation for underfloor heating system in the lead room”).

Note
The table applies if individual room control is installed.

Sizing recommendation for the underfloor heating system in the lead room:

	Minimum flow rate	Minimum water content of the buffer cylinder or the open circuits	Composite pipework 16 x 2 mm / clearance 10 cm		Composite pipework 20 x 2.25 mm / clearance 15 cm	
			Lead room floor area	Number of circuits	Lead room floor area	Number of circuits
	l/h	l	m²	n x m	m²	n x m
HPA-O 3 CS Plus	400	16	21	3x70	21	2x70
HPA-O 4 CS Plus	400	16	21	3x70	21	2x70
HPA-O 6 CS Plus	600	19	21	3x70	21	2x70
HPA-O 8 CS Plus	600	19	21	3x70	21	2x70

	Buffer cylinder always required	Recommended buffer cylinder volume, underfloor heating system	Recommended buffer cylinder volume, radiators	Activate the integral emergency/booster heater
HPA-O 3 CS Plus	No	100	100	yes
HPA-O 4 CS Plus	No	100	100	yes
HPA-O 6 CS Plus	No	100	100	yes
HPA-O 8 CS Plus	No	100	100	yes

- ▶ Install the open heating circuit(s) in the lead room (room where the external programming unit of the heat pump control unit is installed, such as in the living room). The individual room can then be controlled either with the external programming unit or indirectly by adjusting the heating curve or the room influence.

10.9.2 Minimum flow rate for systems with a buffer cylinder

When using a buffer cylinder, in the menu “SETTINGS / HEATING / STANDARD SETTING”, set parameter “BUFFER OPERATION” to “ON”.

10.10 External second heat source

With dual mode systems, connect the heat pump into the return of the second heat source.

10.11 High limit safety cut-out for area heating system

Material losses
In order to prevent excessively high flow temperatures in the area heating system causing damage in the event of a fault, install a high limit safety cut-out to limit the system temperature.

11. Electrical connection

WARNING Electrocution
Before working on the appliance, isolate it from the power supply at the terminal area.

Note
Please observe the instructions for the heat pump manager.

Connection work must only be carried out by a qualified contractor and in accordance with these instructions.

Permission to connect the appliance may need to be obtained from the local power supply utility.

11.1 Terminal area

The terminals are located in the terminal area of the appliance.

Observe chapter "Preparing the electrical installation".

▶ For all connections, use appropriate cables in accordance with local regulations.

Access to the terminal area

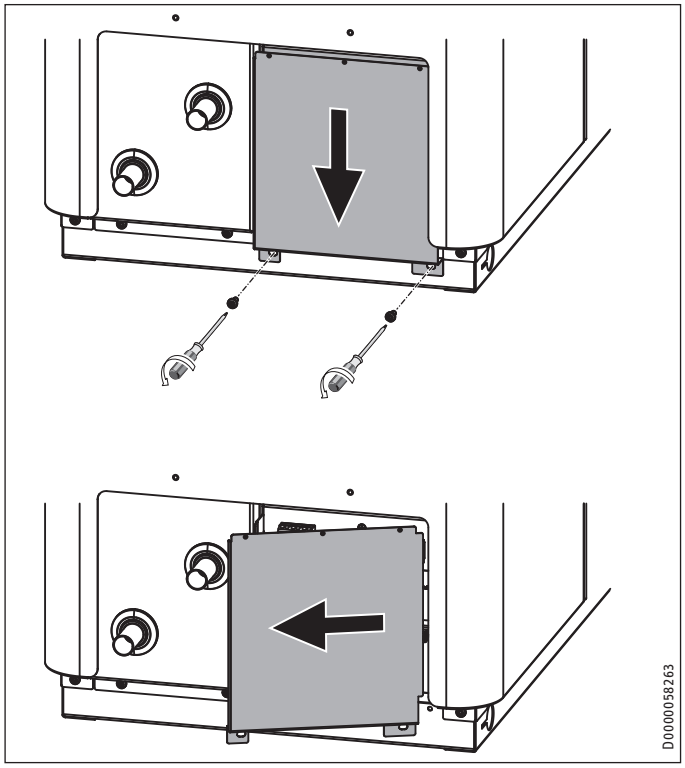

▶ Unscrew and remove the two screws.

▶ Slide the cover down.

▶ Remove the cover by pivoting it open to the right.

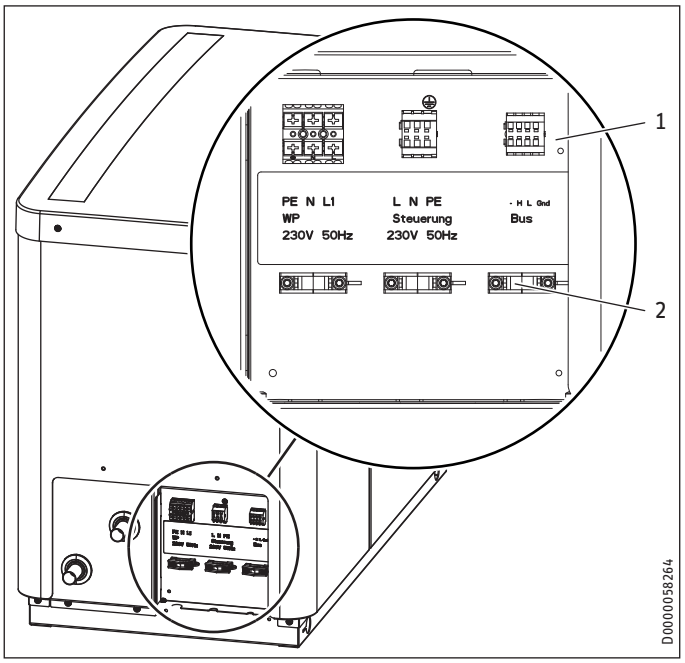

1 Terminal area
2 Strain relief

▶ Route cables and leads through the strain relief fittings.

▶ Terminate the screen at both ends of the bus cable.

▶ If you wish to use the following appliance functions, install an electric emergency/booster heater. An emergency/booster heater is installed in some of the products required as accessories (see chapter “Installation / Appliance description / Accessories”).

Appliance function	Effect of the electric emergency/booster heater
Mono energetic operation	If the dual mode point is undershot, the electric emergency/booster heater safeguards both the heating operation and the delivery of high DHW temperatures.
Emergency mode	Should the heat pump suffer a fault that prevents its continued operation, the heating output will be covered by the electric emergency/booster heater.
Heat-up program (only for underfloor heating systems)	Where return temperatures are <25 °C, the electric emergency/booster heater must provide the necessary heat for screed drying. With these low system temperatures, the drying heat must not be provided by the heat pump, otherwise the frost protection of the appliance can no longer be guaranteed during the defrost cycle.
Pasteurisation control	To heat up the water regularly to a temperature of 60 °C to protect against the growth of legionella bacteria, the electric emergency/booster heater is started automatically when pasteurisation control is enabled.

▶ Connect the cables according to the following diagram.

▶ Earth the LV lead by inverting the screen over the cable sheath and clamping it under the earth terminal.

Note

▶ Earth the LV lead either at the outdoor unit or at one of the products defined as required accessories (see chapter "Installation / Appliance description / Accessories").

▶ Then check the function of the strain relief fittings.

Material losses
Strain relief fittings that are too tight may lead to a short circuit.
► Never tighten them completely.

Connection

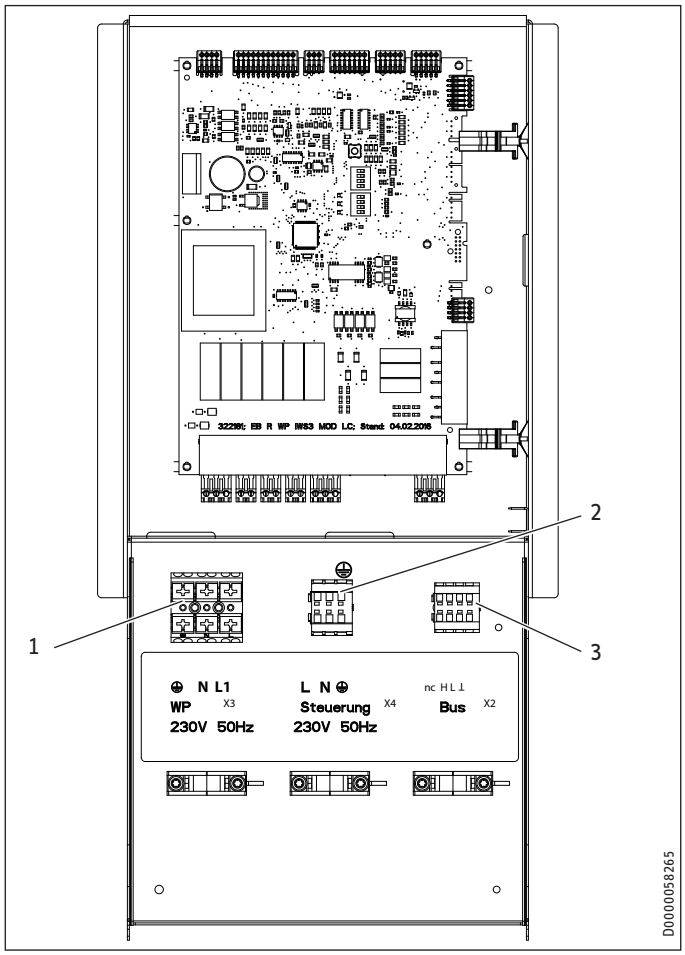

1	X3	Compressor (inverter)
		L1, N, ⏚
2	X4	Control voltage
		Power supply: L, N ⏚
3	X2	Safety extra low voltage (BUS)
		nc (not assigned) High H Low L ⊥

12. Commissioning

A WPM heat pump manager is required to operate the appliance. All necessary adjustments prior to and during operation are made on this device.

Only qualified contractors may make the settings in the heat pump manager commissioning report, commission the appliance and instruct the owner in its use.

Carry out commissioning in accordance with these operating and installation instructions, and the instructions for the heat pump manager. Our service department can assist with commissioning, which is a chargeable service.

Where this appliance is intended for commercial use, the rules of the relevant Operational Safety Ordinance must be observed at commissioning. For further details, check with your local authorising body (e.g. TÜV).

12.1 Checks before commissioning

Before commissioning, check the following points (note the commissioning checklist):

12.1.1 Heating system

- Have you filled the heating system to the correct pressure and closed the automatic air vent valve?

12.1.2 Temperature sensor

- Have you correctly positioned and connected the outside temperature sensor and return temperature sensor (in connection with a buffer cylinder)?

12.1.3 Power supply

- Have you correctly connected the power supply?

12.2 Operation with an external second heat source

The appliance is factory set for compressor operation with an electric emergency/booster heater. If the appliance is operated in dual mode with an external second heat source, set the DIP switch to "Compressor mode with external second heat source" (see chapter "Troubleshooting / Checking the IWS DIP switch settings").

12.3 Initial start-up

12.3.1 Heating curve adjustment

The efficiency of a heat pump decreases as the flow temperature rises. Adjust the heating curve carefully. Heating curves that are set too high result in the zone and thermostatic valves closing, which may prevent the minimum flow rate required in the heating circuit from being achieved.

► Please observe the instructions for the heat pump manager.

The following steps will help you to adjust the heating curve correctly:

- Fully open thermostatic or zone valves in a lead room (e.g. living room and bathroom).
  We do not recommend installing thermostatic or zone valves in the lead room. Control the temperature for these rooms via remote control.
- At different outside temperatures (e.g. –10 °C and +10 °C), adjust the heating curve so that the required temperature is set in the lead room.

Standard values to begin with:

Parameters	Underfloor heating system	Radiator heating system
Heating curve	0.4	0.8
Controller dynamics	10	10
Comfort temperature	20 °C	20 °C

If the room temperature is not high enough in spring and autumn (approx. 10 °C outside temperature), go to the heat pump manager menu under "SETTINGS / HEATING / HEATING CIRCUIT" and raise the "COMFORT TEMPERATURE" parameter.

Note
If no remote control is installed, raising the "COMFORT TEMPERATURE" parameter leads to a parallel offset of the heating curve.

If the room temperature is not high enough when outside temperatures are low, increase the "HEATING CURVE RISE" parameter.

If you raise the "HEATING CURVE RISE" parameter, adjust the zone valve or thermostatic valve in the lead room to the required temperature when outside temperatures are high.

Material losses
Never reduce the temperature in the entire building by closing all zone or thermostatic valves, but by using the setback programs.

When everything has been implemented correctly, the system can be heated to its maximum operating temperature and vented once again.

Material losses
With underfloor heating systems, observe the maximum permissible temperature for the system.

12.3.2 Other settings

▶ For operation with or without a buffer cylinder, observe the information in the instructions for the WPM and parameter BUFFER OPERATION in menu SETTINGS / STANDARD SETTING.

If using the heat-up program

When using the heat-up program, observe the information in the commissioning instructions for the heat pump manager (chapter “PROGRAMS / HEAT-UP PROGRAM”).

13. Settings

13.1 Silent mode

SILENT MODE is an operating mode for air/water heat pumps in which the sound level of the heat pump is reduced.

▶ See the data table (see chapter “Specification / Data table”) for the sound power level when silent mode is deactivated.

You can reduce the fan speed and compressor output for a certain time in the “COMMISSIONING / SILENT MODE / OUTPUT REDUCTION” menu.

Note
If you activate SILENT MODE, the maximum output at A-7/W35 is reduced to 70 % as standard.
This value can be increased further or reduced to the specified minimum value as required.

Note
When silent mode is active, operating costs will be higher. In silent mode 2, heating and DHW heating are provided solely via the emergency/booster heater.

▶ See the table for the maximum appliance sound levels according to the settings made in the “COMMISSIONING / SILENT MODE / OUTPUT REDUCTION / OUTPUT” menu.

	Setting in the WPM Output restricted to [%]	Sound power level Maximum value due to output restriction [dB(A)]	Heating output Maximum at A-7/W35 [kW]
HPA-O 3 CS Plus	70	54	2.23
	43	52	1.38
HPA-O 4 CS Plus	70	56	2.65
	35	52	1.38
HPA-O 6 CS Plus	70	58	4,96
	35	57	2,76
HPA-O 8 CS Plus	70	61	4.96
	35	57	2.76

▶ In the “PROGRAMS / SILENT PROGRAM 1” menu, set the times when the heat pump should switch to a quieter operating mode.

14. Shutdown

Material losses
Never interrupt the heat pump power supply, even outside the heating season. Otherwise, system frost protection is not guaranteed.
The heat pump manager automatically switches the heat pump to summer or winter mode.

14.1 Standby mode

To shut down the appliance, simply set the heat pump manager to "Standby mode". This way the safety functions that protect the system remain enabled, e.g. frost protection.

14.2 Power interruption

If the system is to be isolated from the power supply permanently, please observe the following:

Material losses
- ▶ If the heat pump and frost protection are completely switched off, drain the system on the water side.

15. Maintenance

WARNING Electrocution
- ▶ **Prior to commencing any service or cleaning work, isolate the appliance across all poles from the power supply.**

Following disconnection from the power supply, parts of the appliance may remain energised for 2 minutes until the inverter capacitors have discharged.

Material losses
Keep the air discharge and intake apertures free from snow and ice.

- ▶ Remove any leaves or other foreign bodies from the evaporator fins periodically.

We recommend a regular inspection (to establish the current condition of the system), and maintenance if required (to return the system to its original condition).

16. Troubleshooting

WARNING Electrocution
Before working on the appliance, isolate it from the power supply at the control panel.
Following disconnection from the power supply, parts of the appliance may remain energised for 2 minutes until the inverter capacitors have discharged.

Note
Please observe the instructions for the heat pump manager.

If you cannot locate the fault using the heat pump manager, use the controls on the IWS.

- ▶ Read the following sections on troubleshooting and carry out the instructions.

16.1 Checking the IWS DIP switch settings

- ▶ Carry out the following steps to make the IWS accessible.

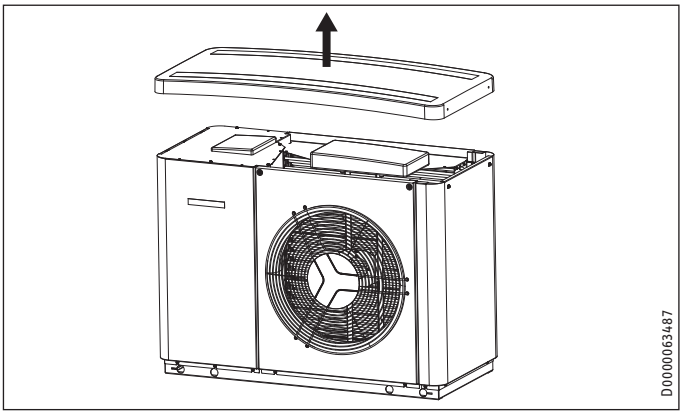

- ▶ Undo and remove the four screws on the sides of the hood.
- ▶ Remove the hood.

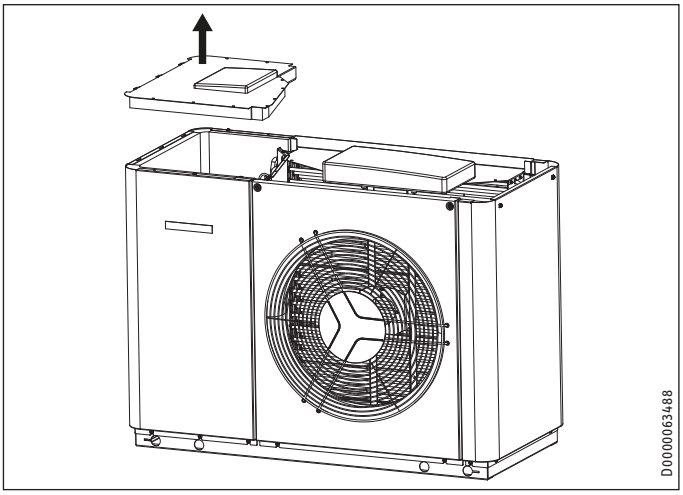

- ▶ Unscrew and remove the four screws on the top panel.
- ▶ Remove the top panel.

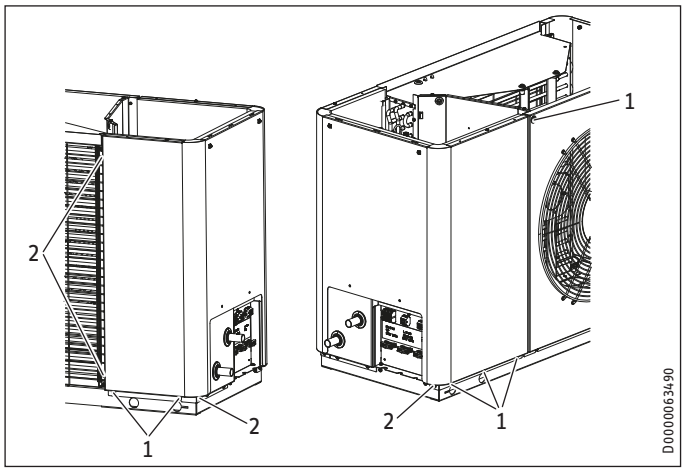

1 Screws to be unscrewed
2 Screws to be removed

▶ Unscrew and remove the screws.

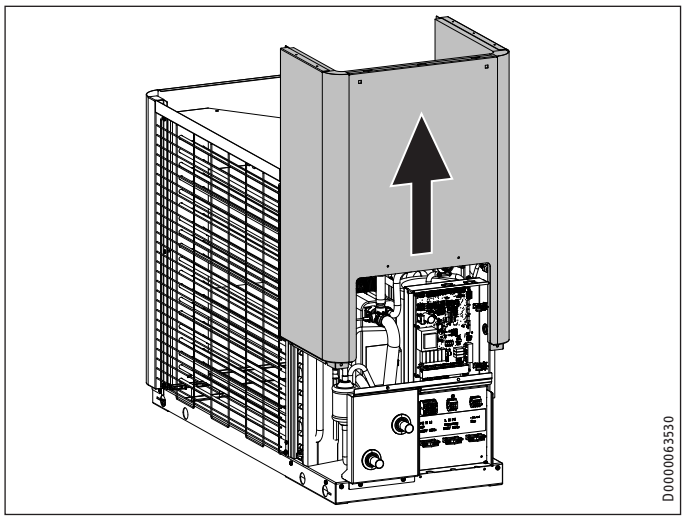

▶ Completely remove the side panel by sliding it upwards.

▶ The IWS is located above the terminal area.

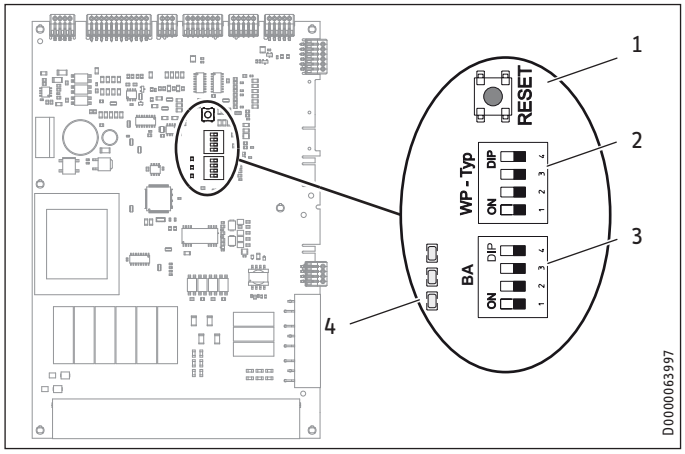

1 Reset button
2 DIP switch (WP-Typ)
3 DIP switch (BA)
4 LEDs

16.1.1 DIP switch (WP-Typ)

With the DIP switch (WP-Typ), you can set the IWS to suit the relevant heat pump type.

Factory setting
Compressor mode with electric emergency/booster heater

Note
An emergency/booster heater is installed in some of the products required as accessories (see chapter “Installation / Appliance description / Accessories”).

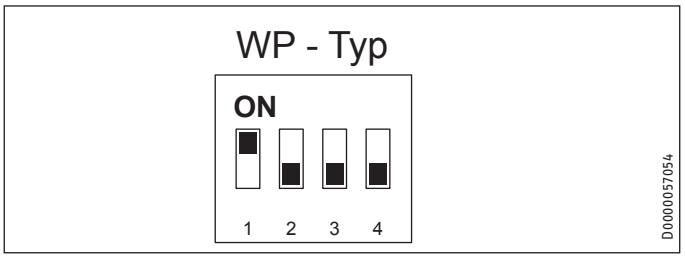

▶ Check whether the DIP switch is set correctly.

Compressor mode with external second heat source

Material losses
In this case, do not connect the electric emergency/booster heater.

If the appliance is operated in dual mode with an external second heat source, set the DIP switch as follows.

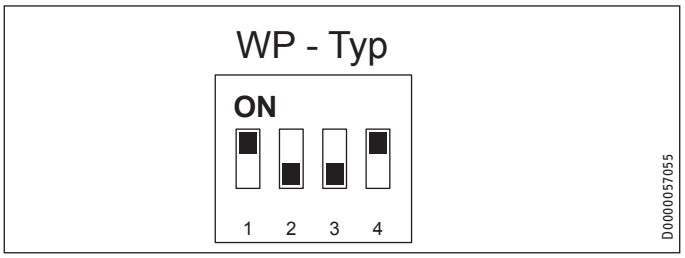

16.1.2 DIP switch (BA)

Factory setting

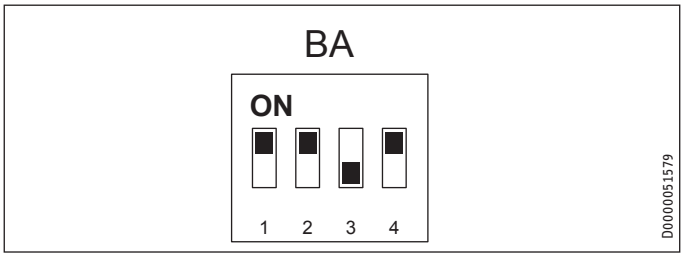

16.2 LEDs (IWS)

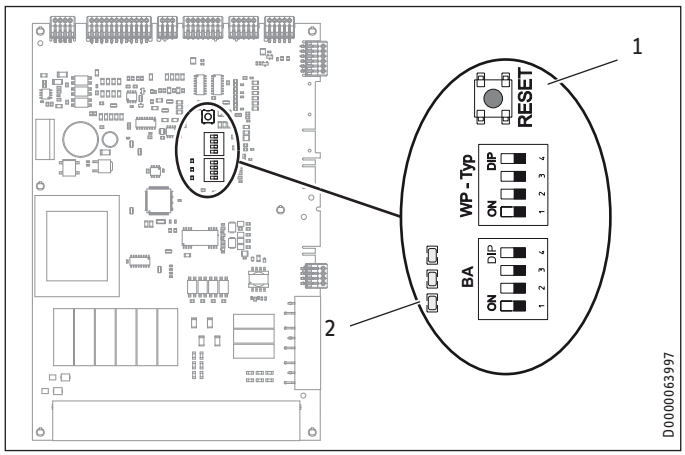

1 Reset button
2 LEDs

The following table shows the meaning of the LEDs on the IWS.

LED indicator	Meaning
Red LED flashes	Single fault. The appliance shuts down. The appliance restarts after 10 minutes. The LED extinguishes.
Red LED illuminates	Multiple faults occurred. The appliance shuts down. The appliance only restarts following a reset on the IWS. The internal fault counter will then be reset. The appliance can be restarted after 10 minutes. The LED extinguishes.
Green LED (centre) flashes	The heat pump is initialising.
Green LED (centre) illuminates	The heat pump was initialised successfully and the connection with the WPM is active.

Faults indicated by the red LED:

- High pressure fault
- Low pressure fault
- Central fault
- Hardware fault on the IWS (see fault list)

16.3 Reset button

If the IWS was incorrectly initialised, you can reset the settings with this button.

▶ For this, also observe chapter “Reinitialising the IWS” in the heat pump manager instructions.

16.4 Fan noise

The heat pump extracts heat from the outdoor air. This causes the outdoor air to cool down. At outside temperatures of 0 °C to 8 °C, the air may be cooled to below freezing point. If, under these conditions, precipitation occurs in the form of rain or fog, ice may form on the air grille, the fan blades or the air routing pipes. If the fan comes into contact with this ice, noise develops.

How to remedy rhythmic scratching or grinding noises:

▶ Check whether condensate can drain freely from the appliance.

▶ Check whether the design output and temperature are set correctly. Ice formation is particularly pronounced when a high heating output is called for at moderate outside temperatures.

▶ Carry out a manual defrost, repeatedly if required, until the fan runs free again. Observe the information in the heat pump manager instructions and the “START DEFROST” parameter in the “COMMISSIONING / COMPRESSOR” menu.

▶ At outside temperatures above + 1 °C, switch the appliance off for around 1 hour or switch it over to emergency mode. After this, the ice should have melted.

▶ Check whether the appliance is installed in line with the installation conditions.

▶ If noise occurs frequently, notify the service department.

17. Specification

17.1 Dimensions and connections

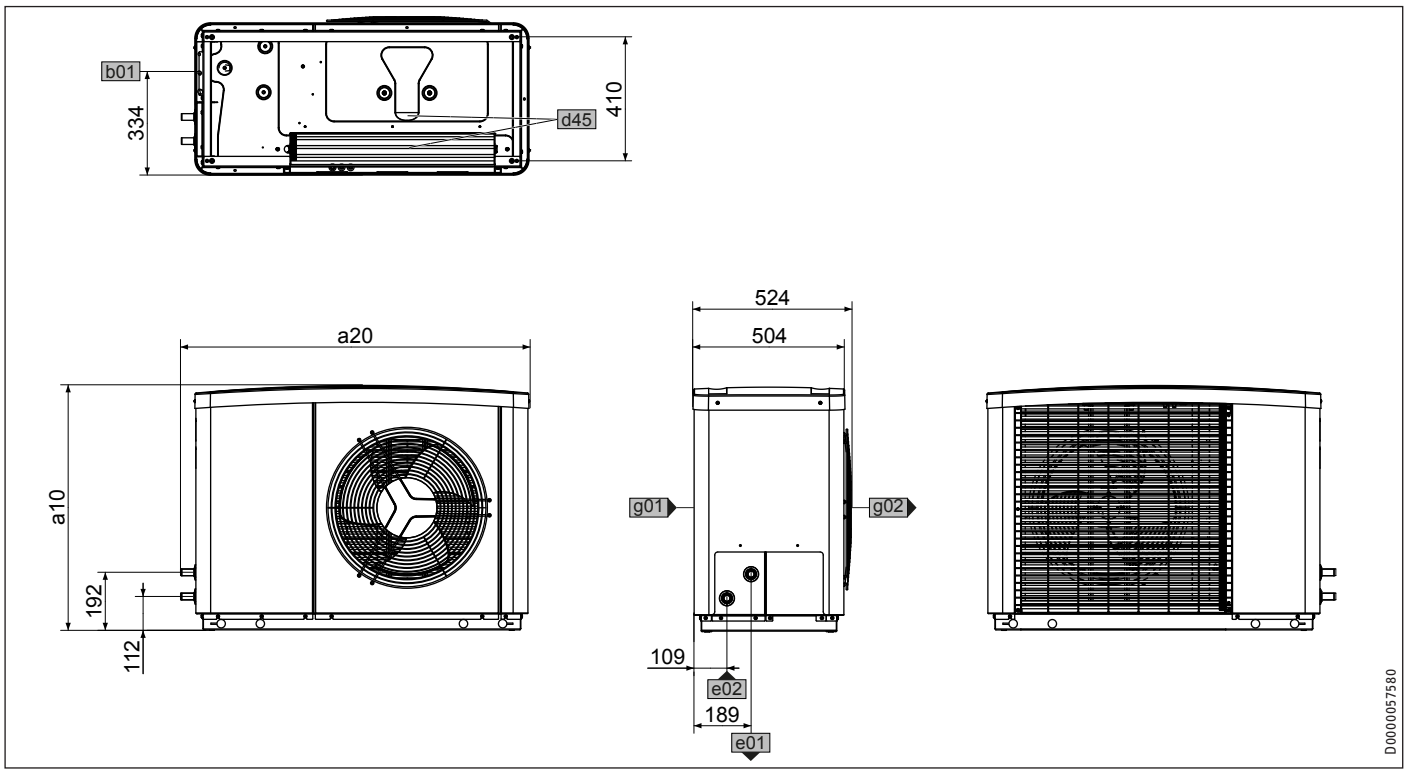

				HPA-0 3 CS Plus	HPA-0 4 CS Plus	HPA-0 6 CS Plus	HPA-0 8 CS Plus
a10	appliance	Height	mm	740	740	812	812
a20	appliance	Width	mm	1022	1022	1152	1152
b01	Entry electrical cables						
d45	Condensate drain						
e01	Heating flow	Diameter	mm	22	22	22	22
e02	Heating return	Diameter	mm	22	22	22	22
g01	Air intake						
g02	Air discharge						

17.2 Wiring diagram

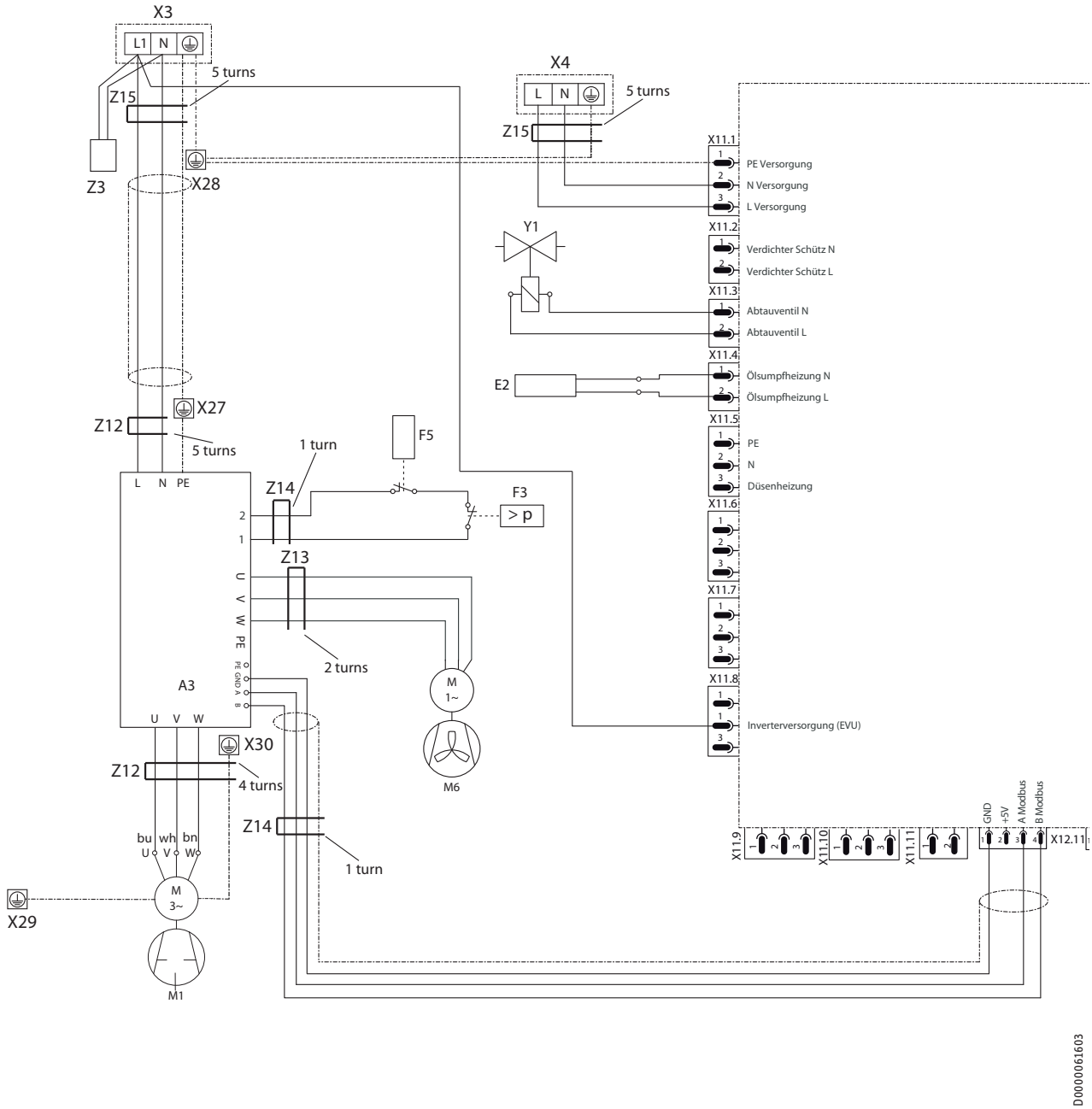

A2	Integral heat pump control unit (IWS)
A3	Inverter compressor/fan
B1	Heating flow temperature sensor - PT1000
B2	Heating return temperature sensor - PT1000
B5	Hot gas temperature sensor - PT1000
B6	Outdoor air temperature sensor - PT1000
B7	Compressor intake temperature sensor - PT1000
B8	Evaporator discharge temperature sensor - PT1000
B9	Frost protection temperature sensor - PT1000
B13	Defrost end temperature sensor - PT1000
B16	Oil sump temperature sensor - PT1000
E2	Oil sump heater
F3	High pressure switch 45 bar
F5	Klixon HG compressor
M1	Compressor motor
M6	Fan motor
M7	Stepper motor for el. expansion valve
M9	Inverter cooling valve
P1	High pressure sensor (42 bar)
P3	Low pressure sensor (16 bar)
X2	External BUS terminal
X3	External power terminal
X4	External control terminal
X11.1	3-pin IWS plug - supply
X11.3	2-pin IWS plug - defrost signal
X11.4	2-pin IWS plug - oil sump
X11.5	3-pin IWS plug - nozzle heating
X11.8	IWS plug, inverter supply
X12.2	12-pin IWS plug - temperature sensors
X12.3	IWS plug, CAN bus
X12.4	7-pin IWS plug - sensors
X12.5	5-pin IWS plug - el. expansion valve

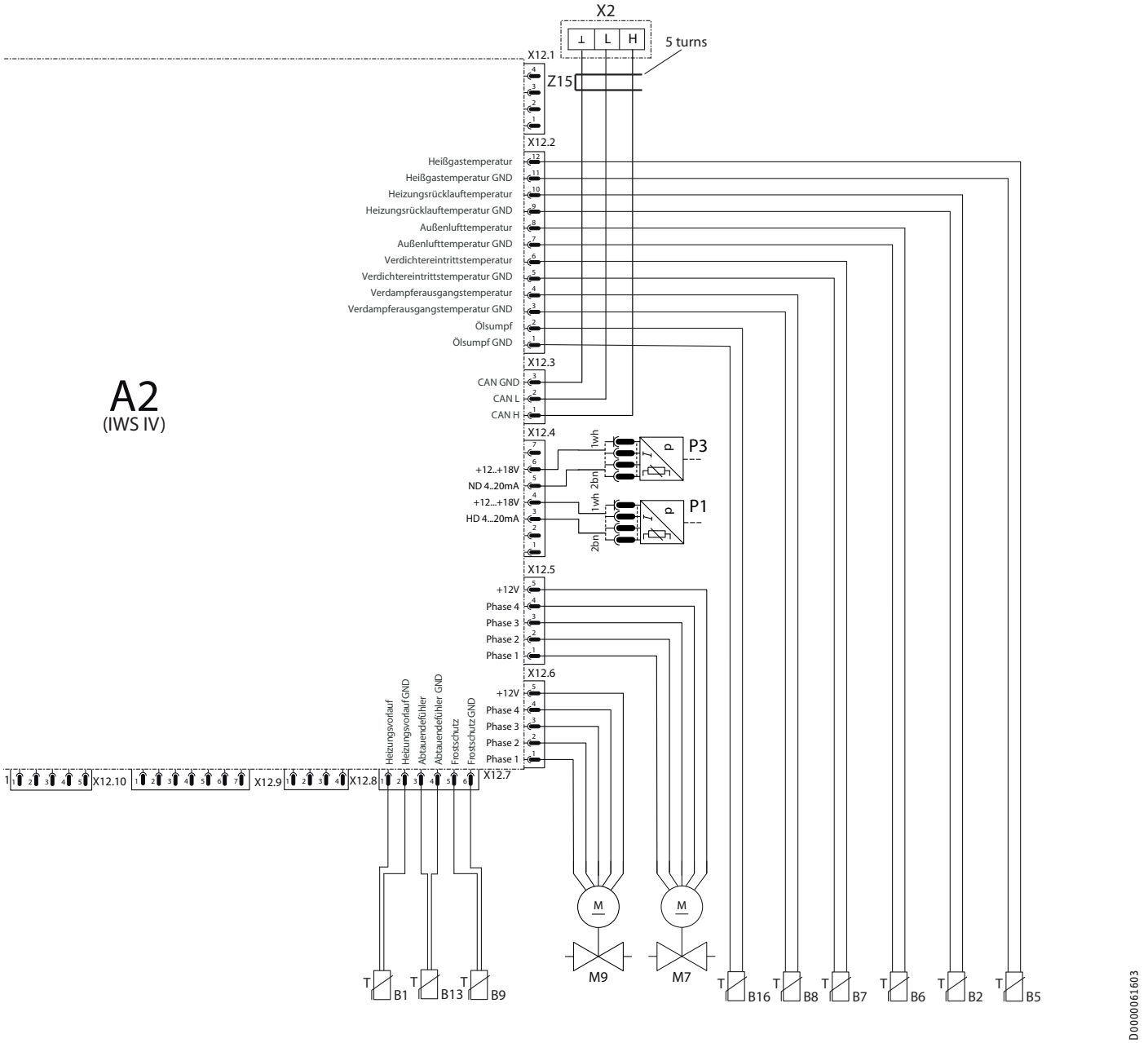

X12.6	5-pin IWS plug - bypass valve
X12.7	6-pin IWS plug - temperature sensors
X12.11	5-pin IWS plug - Modbus
X27	Earth stud, inverter mains
X28	Earth stud, control panel
X29	Earth stud, control panel rear
X30	Earth stud, inverter cooling
Y1	Diverter valve, defrost
Z3	Interference suppression filter
Z12	Suppressor element, inverter mains/compressor
Z13	Suppressor element, fan
Z14	Suppressor element, safety switch/Modbus (only HPA-O 6 CS Plus, HPA-O 8 CS Plus)
Z15	Suppressor element, connecting cable (only HPA-O 6 CS Plus, HPA-O 8 CS Plus)

17.3 Application limit

17.3.1 Heating

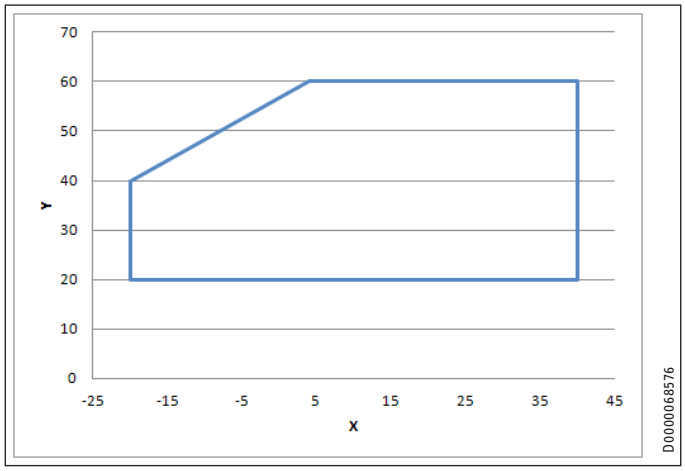

X Outside temperature [°C]
Y Flow temperature [°C]

17.3.2 Cooling

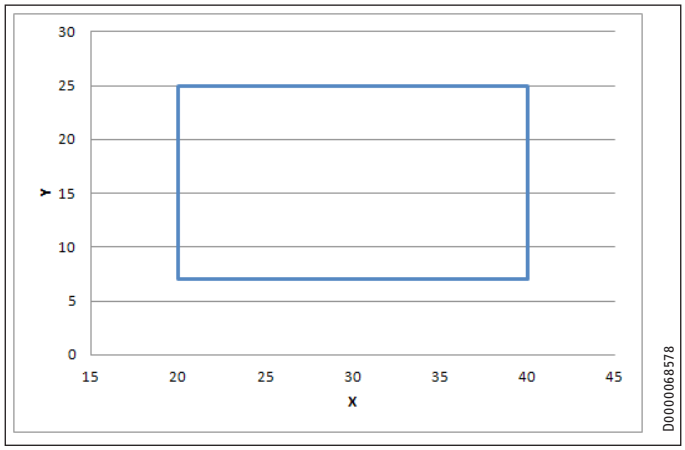

X Outside temperature [°C]
Y Flow temperature [°C]

17.4 Output diagrams HPA-O 3 CS Plus

Heating output

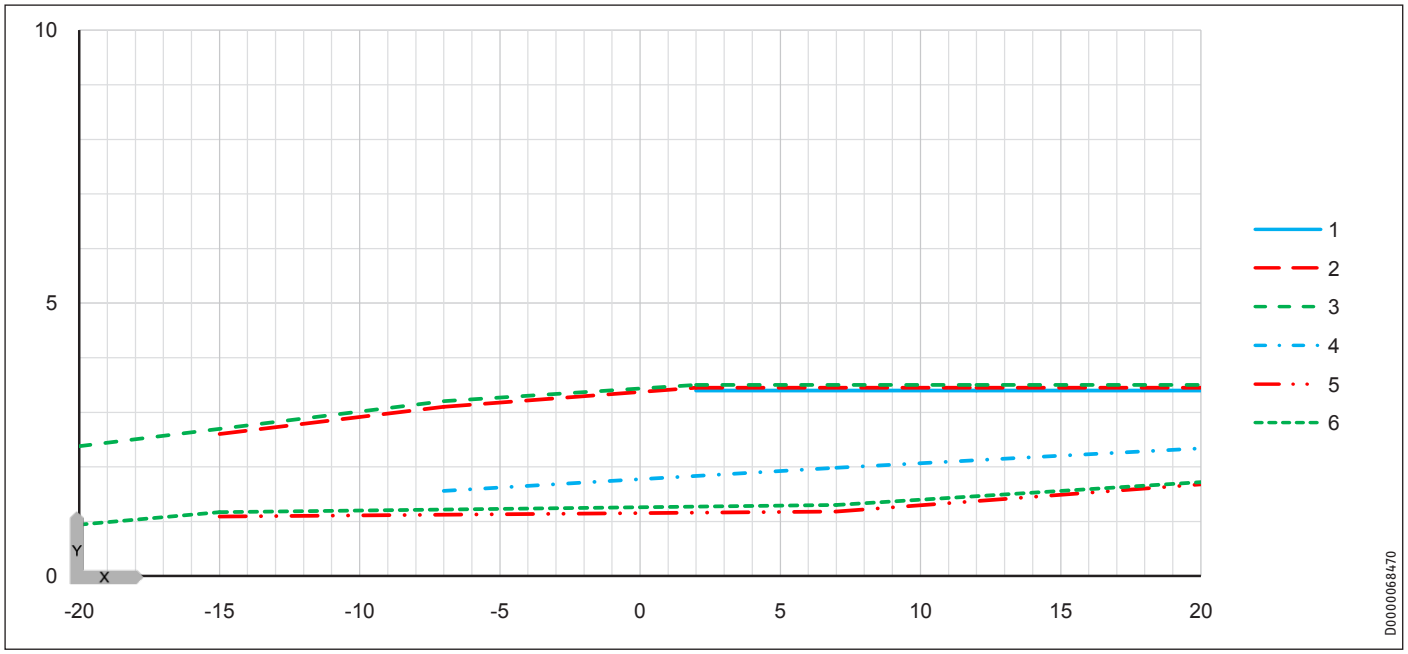

X Outside temperature [°C]
Y Heating output [kW]

1 Max. W55
2 Max. W45
3 Max. W35
4 Min. W55
5 Min. W45
6 Min. W35

Cooling capacity

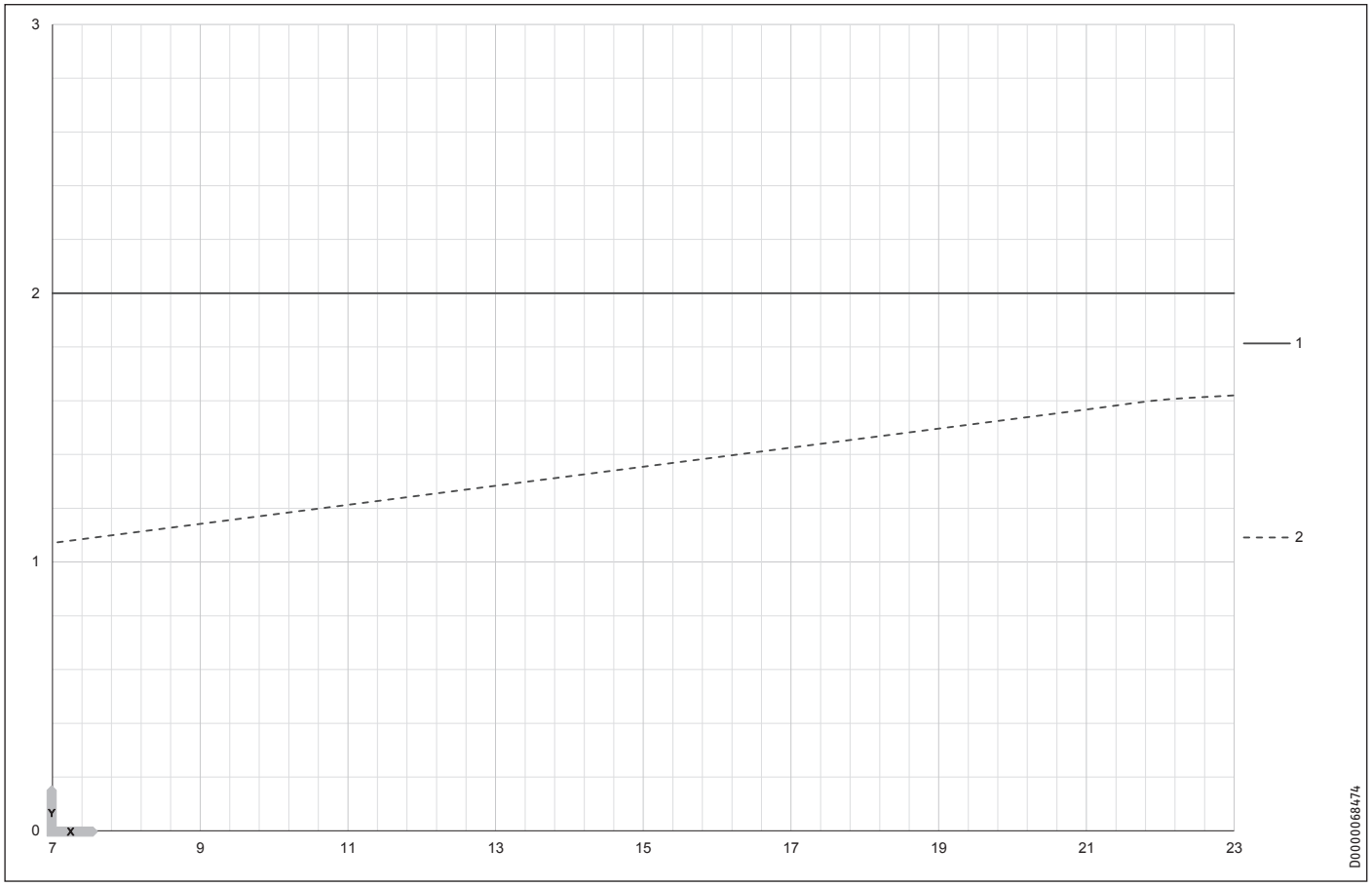

X Flow temperature [°C]
Y Cooling capacity [kW]

1 Max. A35
2 Min. A35

17.5 Output diagrams HPA-O 4 CS Plus

Heating output

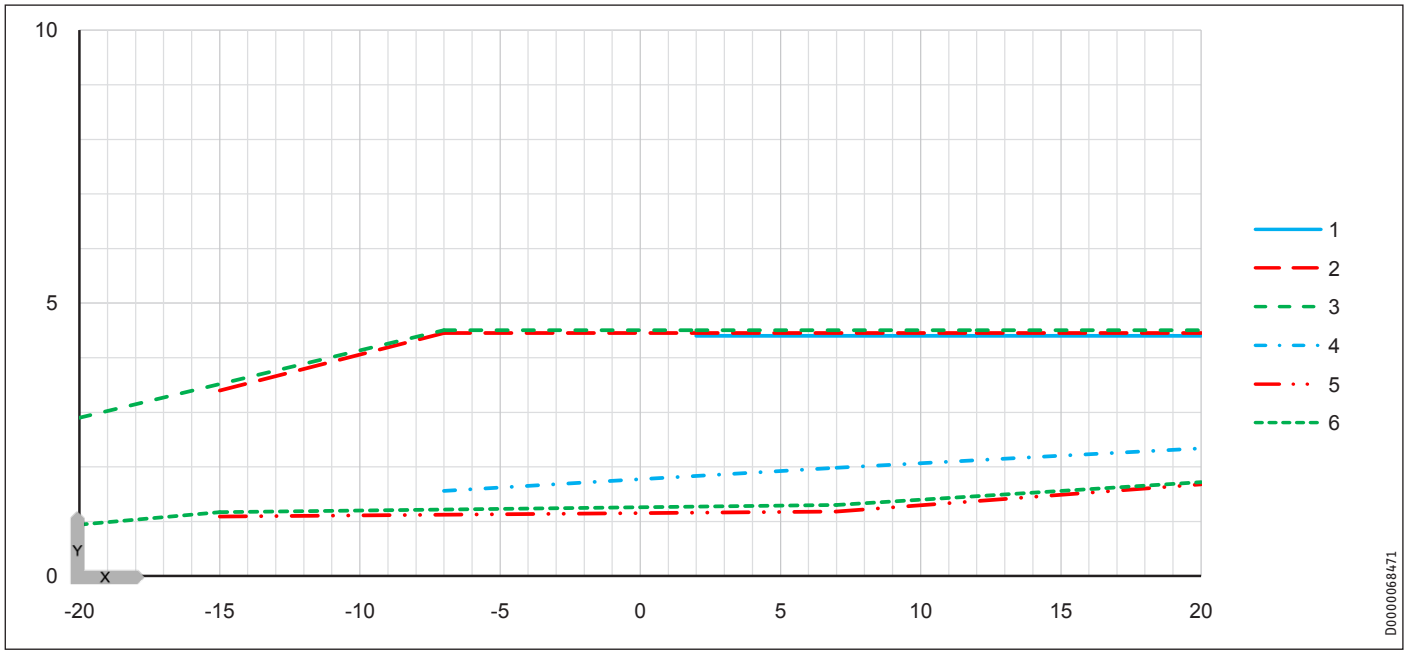

X Outside temperature [°C]
Y Heating output [kW]

1 Max. W55
2 Max. W45
3 Max. W35
4 Min. W55
5 Min. W45
6 Min. W35

Cooling capacity

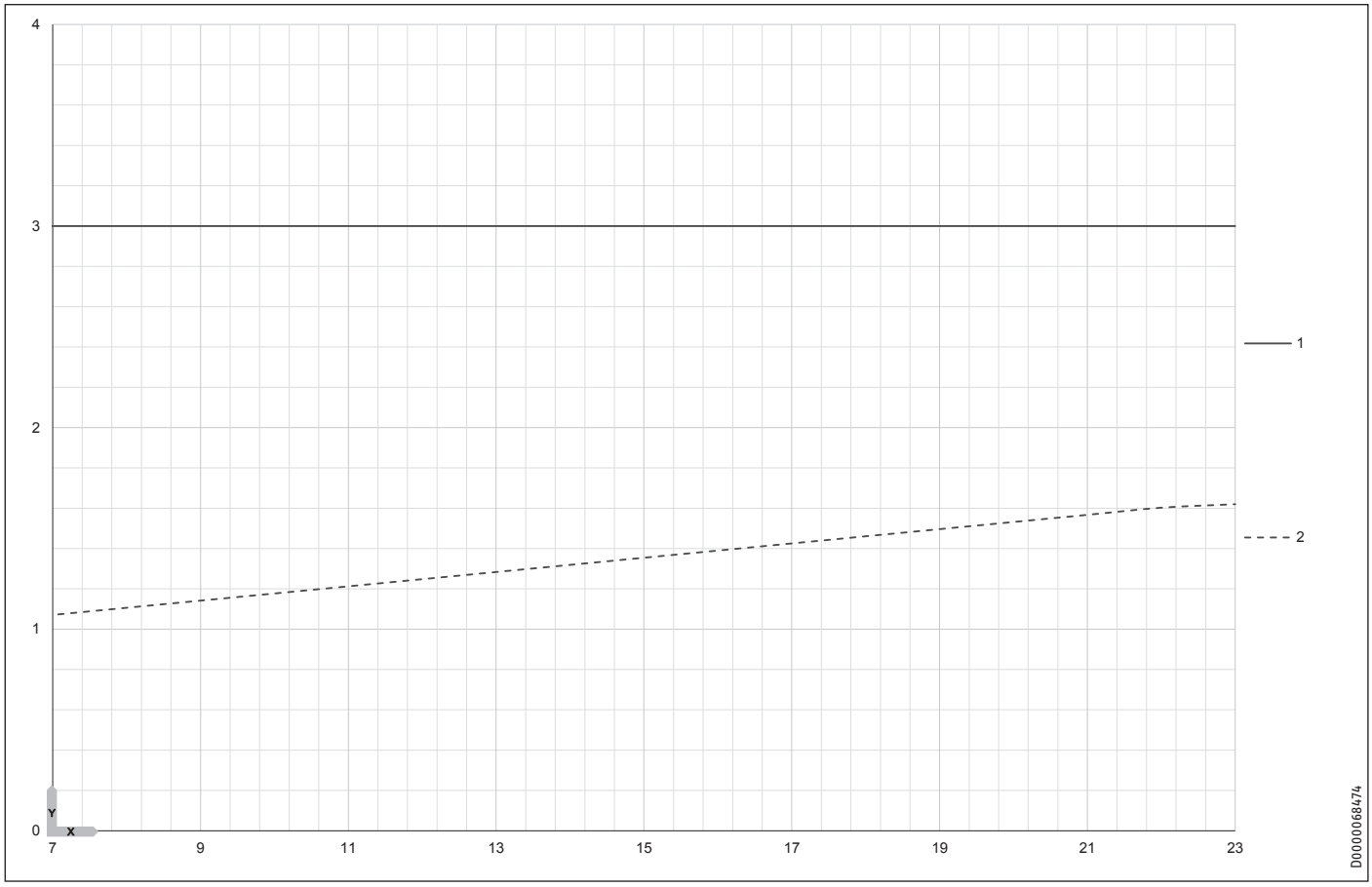

X Flow temperature [°C]
Y Cooling capacity [kW]

1 Max. A35
2 Min. A35

17.6 Output diagrams HPA-O 6 CS Plus

Heating output

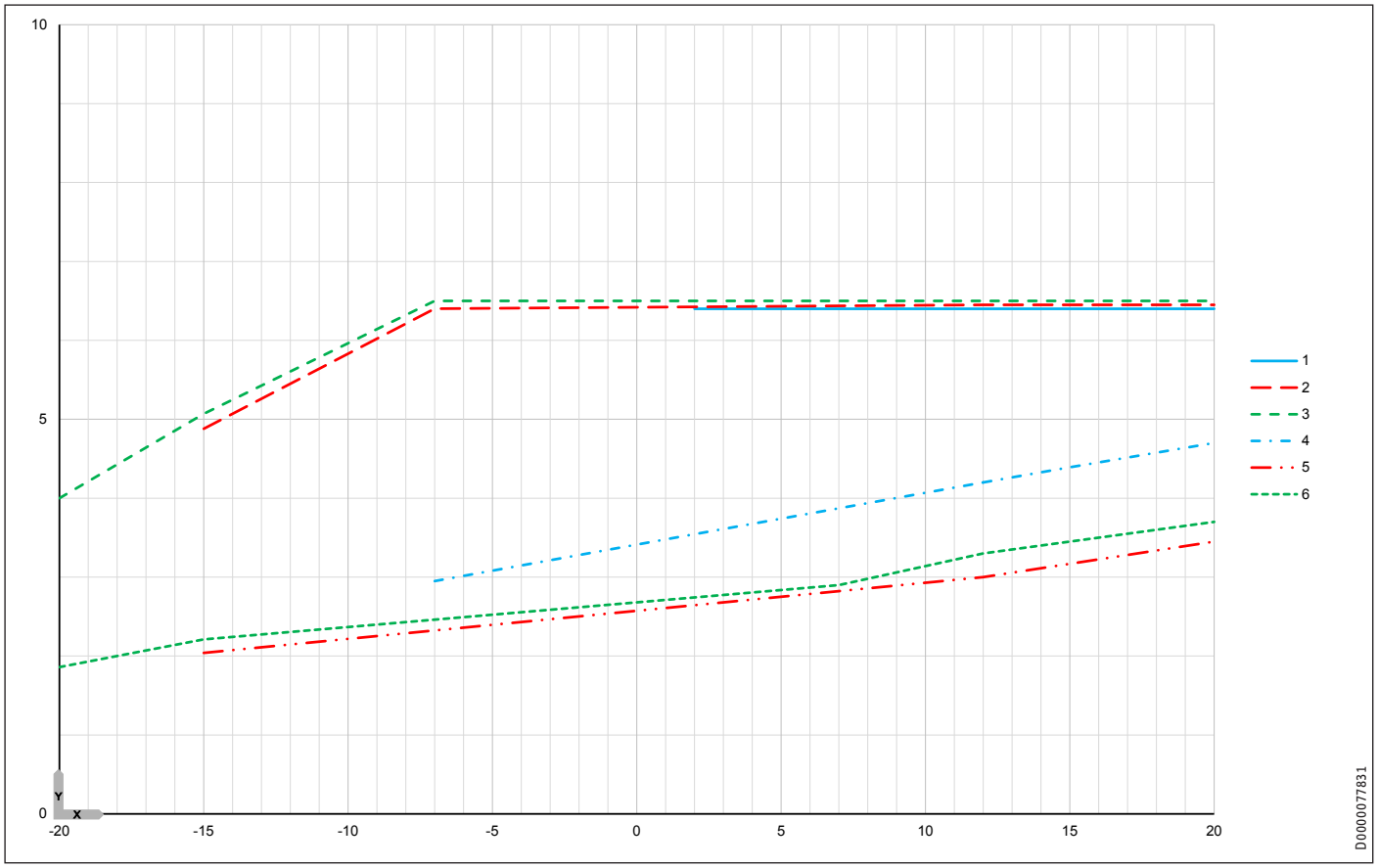

X Outside temperature [°C]
Y Heating output [kW]

1 Max. W55
2 Max. W45
3 Max. W35
4 Min. W55
5 Min. W45
6 Min. W35

Cooling capacity

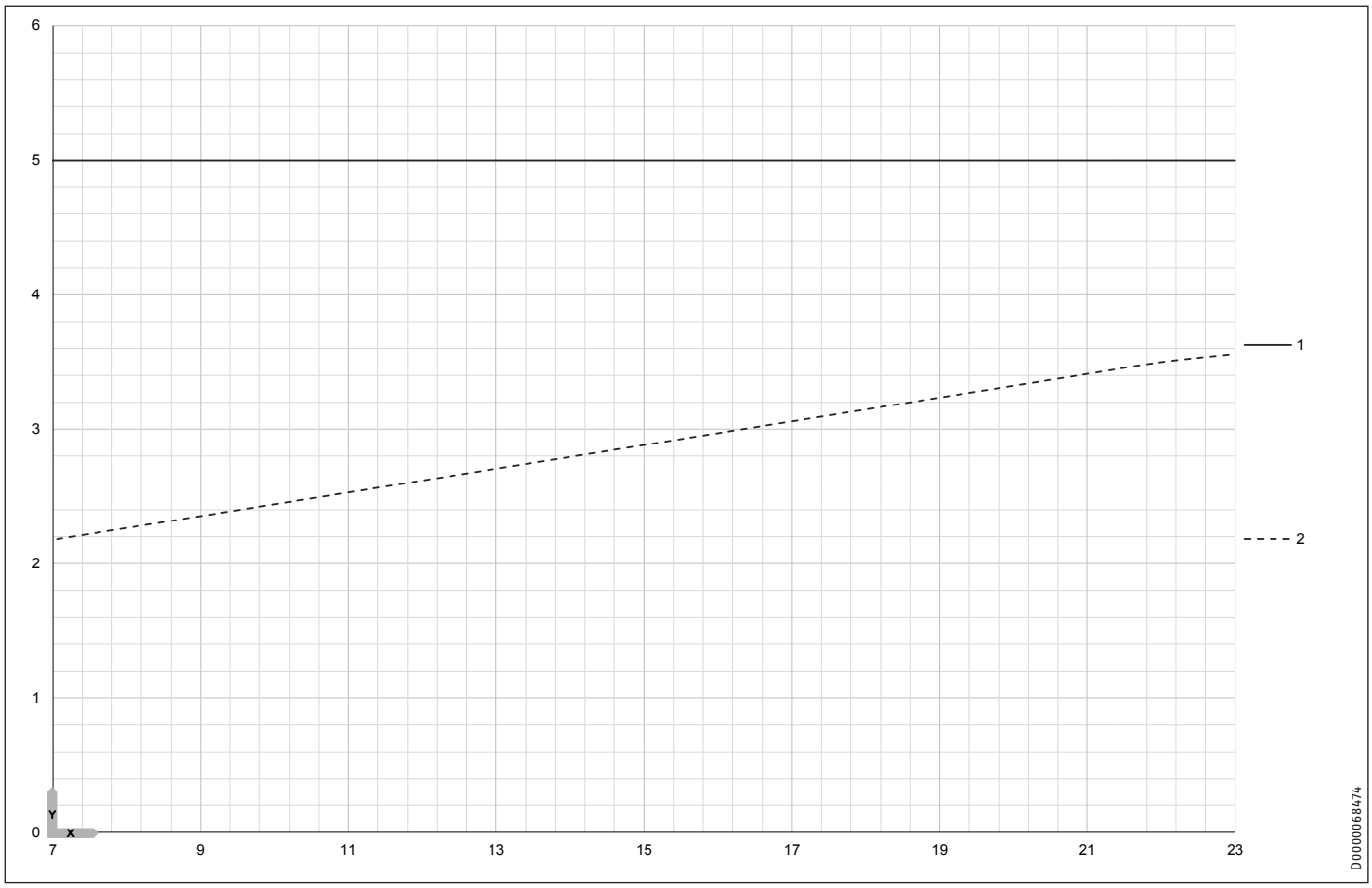

X Flow temperature [°C]
Y Cooling capacity [kW]

1 Max. A35
2 Min. A35

17.7 Output diagrams HPA-O 8 CS Plus

Heating output

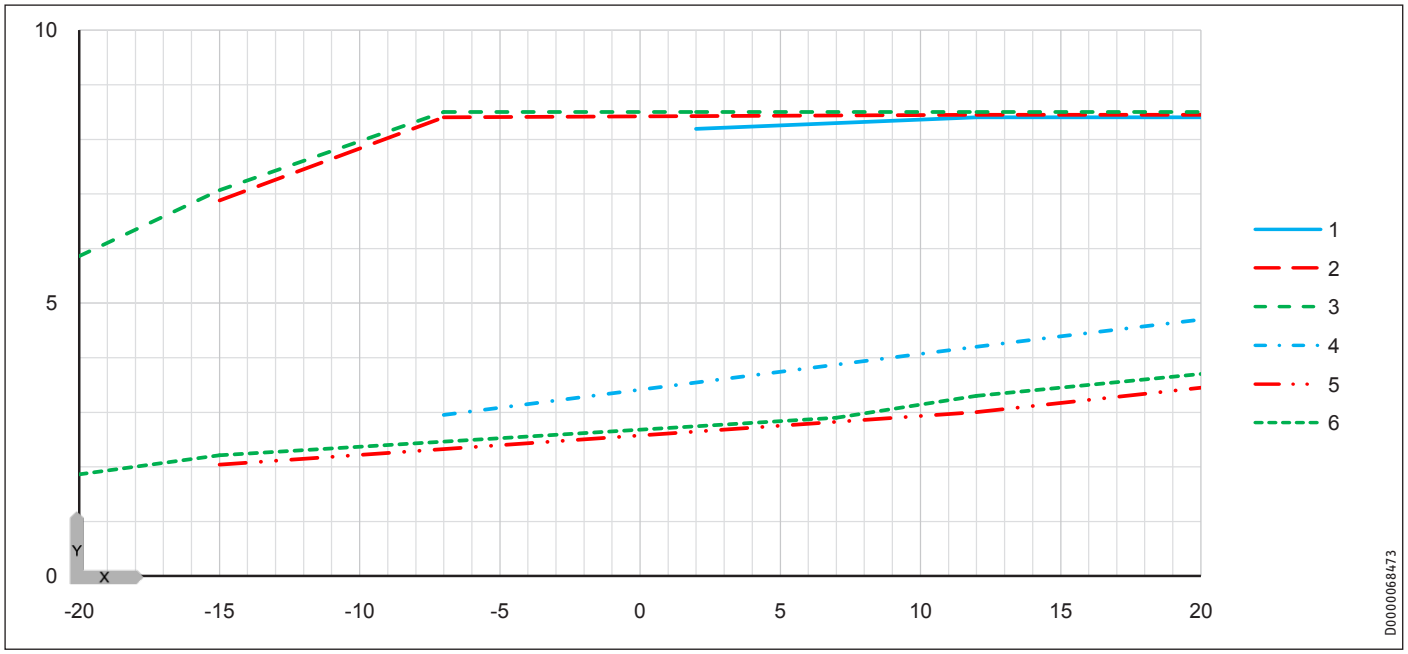

X Outside temperature [°C]
Y Heating output [kW]

1 Max. W55
2 Max. W45
3 Max. W35
4 Min. W55
5 Min. W45
6 Min. W35

Cooling capacity

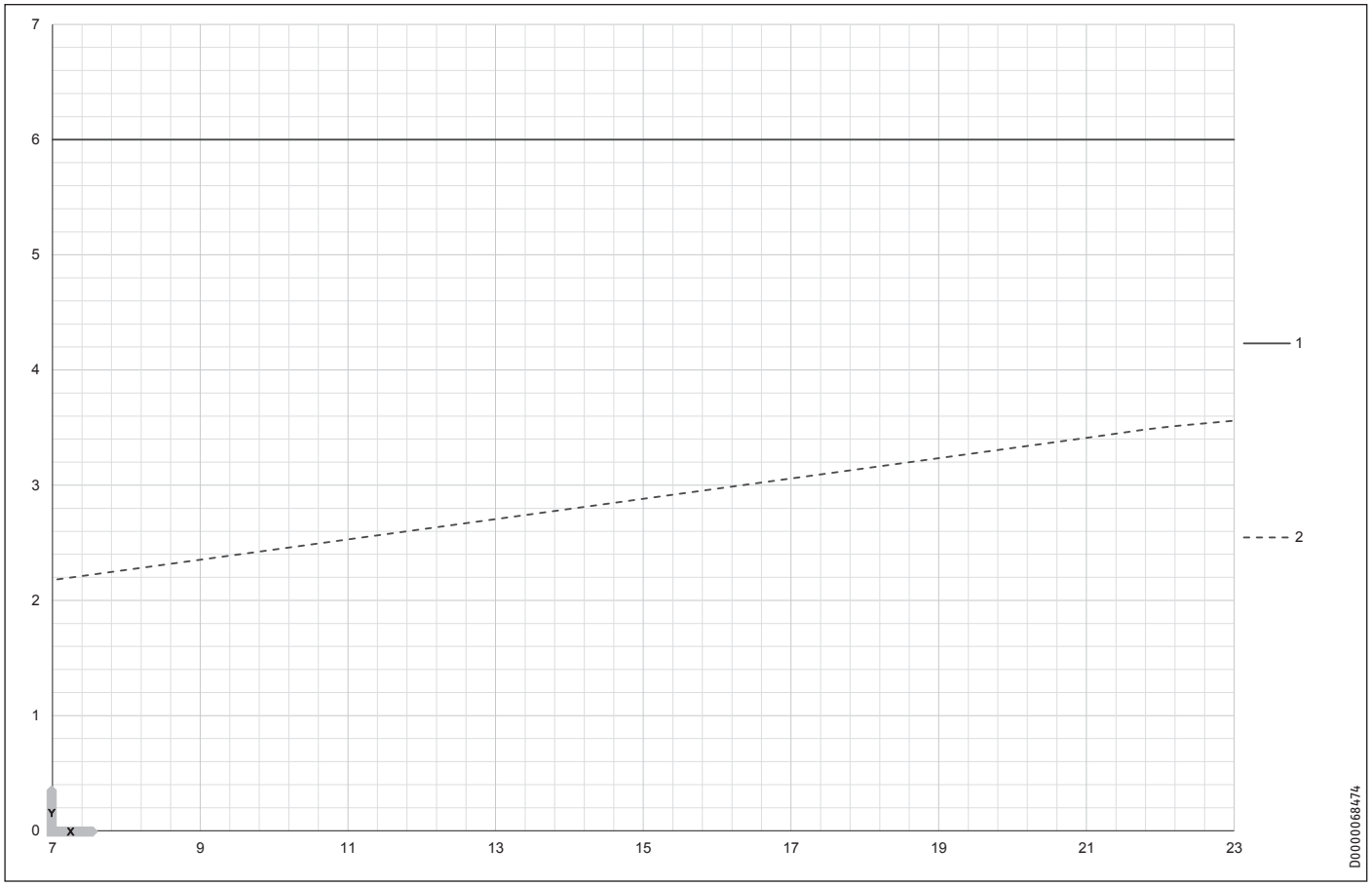

X Flow temperature [°C]
Y Cooling capacity [kW]

1 Max. A35
2 Min. A35

17.8 Data table

Output details apply to new appliances with clean heat exchangers.

The power consumption figures for the integral auxiliary drives are maximum values and may vary subject to operating point.

The power consumption of the integral auxiliary drives is included in the output details of the heat pump (to EN 14511).

		HPA-O 3 CS Plus	HPA-O 4 CS Plus	HPA-O 6 CS Plus	HPA-O 8 CS Plus
		238984	238985	238986	238987
Heating output					
Heating output at A7/W35 (min./max.)	kW	1.30/3.50	1.30/4.50	2.60/6.50	2.60/8.50
Heating output at A2/W35 (min./max.)	kW	1.00/3.50	1.00/4.50	2.00/6.50	2.00/8.50
Heating output at A-7/W35 (min./max.)	kW	1.00/3.20	1.00/4.06	3.00/6.00	3.00/7.80
Heating output at A15/W55 (EN 14511)	kW	2.48	2.48	5.32	5.32
Heating output at A15/W35 (EN 14511)	kW	2.90	2.90	5.90	5.90
Heating output at A7/W55 (EN 14511)	kW	1.92	1.92	4.31	4.31
Heating output at A7/W45 (EN 14511)	kW	4.16	4.16	5.28	5.28
Heating output at A7/W35 (EN 14511)	kW	2.73	2.73	4.86	4.86
Heating output at A2/W45 (EN 14511)	kW	3.22	3.22	5.02	6.01
Heating output at A2/W35 (EN 14511)	kW	2.08	2.58	5.30	5.30
Heating output at A-7/W35 (EN 14511)	kW	3.20	3.96	6.00	7.80
Heating output at A-7/W45 (EN 14511)	kW	3.01	3.88	5.70	8.20
Heating output at A-15/W35 (EN 14511)	kW	2.90	3.43	5.98	7.07
Max. heating output in silent mode at A-7/W35	kW	1.38	1.38	2.76	2.76
Heating output in silent mode at A-7/W35 (70 %)	kW	2.23	2.65	4.96	4.96
Max. cooling capacity at A35/W7	kW	2.00	3.00	5.00	6.00
Cooling capacity at A35/W7 partial load	kW	1.00	1.50	2.50	3.00
Max. cooling capacity at A35/W18	kW	2.00	3.00	5.00	6.00
Cooling capacity at A35/W18 partial load	kW	1.50	1.50	2.50	3.00
Power consumption					
Max. power consumption, fan heating	kW	0.03	0.03	0.1	0.1
Power consumption at A15/W55 (EN 14511)	kW	0.75	0.75	1.68	1.68
Power consumption at A15/W35 (EN 14511)	kW	0.49	0.49	1.05	1.05
Power consumption at A7/W55 (EN 14511)	kW	0.74	0.74	1.58	1.58
Power consumption at A7/W45 (EN 14511)	kW	1.23	1.23	1.52	1.52
Power consumption at A7/W35 (EN 14511)	kW	0.58	0.58	1.02	1.02
Power consumption at A2/W45 (EN 14511)	kW	1.14	1.14	1.71	2.06
Power consumption at A2/W35 (EN 14511)	kW	0.56	0.71	1.39	1.39
Power consumption at A-7/W35 (EN 14511)	kW	1.14	1.45	2.01	2.68
Power consumption at A-7/W45 (EN 14511)	kW	1.24	1.72	2.32	3.53
Power consumption at A-15/W35 (EN 14511)	kW	1.18	1.42	2.26	2.84
Coefficient of performance					
COP at A15/W55 (EN 14511)		3.31	3.31	3.17	3.17
COP at A15/W35 (EN 14511)		5.92	5.92	5.62	5.62
COP at A7/W55 (EN 14511)		2.59	2.59	2.73	2.73
COP at A7/W45 (EN 14511)		3.37	3.37	3.47	3.47
COP at A7/W35 (EN 14511)		4.70	4.70	4.76	4.76
COP at A2/W35 (EN 14511)		3.70	3.64	3.80	3.80
COP at A-7/W35 (EN 14511)		2.81	2.73	2.98	2.91
COP at A-7/W45 (EN 14511)		2.41	2.25	2.45	2.32
COP at A-15/W35 (EN 14511)		2.46	2.41	2.65	2.49
SCOP (EN 14825)		4.23	4.15	4.48	4.48
Max. cooling capacity factor at A35/W7		2.15	1.62	1.73	1.73
Cooling capacity factor at A35/W7 partial load		2.38	2.38	2.40	2.40
Max. cooling capacity factor at A35/W18		3.12	3.12	2.88	2.88
Cooling capacity factor at A35/W18 partial load		3.56	3.56	3.28	3.28
Sound emissions					
Sound power level (EN 12102)	dB(A)	52	52	57	57
Sound pressure level at 5 m in free field	dB(A)	30	30	35	35
Max. sound power level for outdoor installation	dB(A)	58	60	63	66
Sound power level for outdoor installation in silent mode 70 %	dB(A)	54	56	58	61
Max. sound power level for outdoor installation, silent mode	dB(A)	52	52	57	57

Specification

		HPA-0 3 CS Plus	HPA-0 4 CS Plus	HPA-0 6 CS Plus	HPA-0 8 CS Plus
Application limits					
Min. application limit on the heating side	°C	15	15	15	15
Max. application limit on heating side	°C	60	60	60	60
Min. application limit, heat source	°C	-20	-20	-20	-20
Max. application limit, heat source	°C	40	40	40	40
Energy data					
Energy efficiency class		A+/A++	A+/A++	A+/A++	A+/A++
Electrical data					
Max. power consumption without emergency/booster heater	kW	2.2	2.2	4.6	4.6
Rated voltage, compressor	V	230	230	230	230
Rated voltage, control unit	V	230	230	230	230
Compressor phases		1/N/PE	1/N/PE	1/N/PE	1/N/PE
Control unit phases		1/N/PE	1/N/PE	1/N/PE	1/N/PE
Compressor fuse protection	A	1 x B 16	1 x B 16	1 x B 25	1 x B 25
Control unit fuse protection	A	1 x B 16	1 x B 16	1 x B 16	1 x B 16
Starting current	A	5	5	7	7
Max. operating current	A	9.6	9.6	20.0	20.0
Versions					
Refrigerant		R410A	R410A	R410A	R410A
Refrigerant charge	kg	1.1	1.1	2	2
CO_2 equivalent (CO_2e)	t	2.3	2.3	4.18	4.18
Global warming potential of the refrigerant (GWP100)		2088	2088	2088	2088
IP rating		IP 14B	IP 14B	IP 14B	IP 14B
Condenser material		1.4401/Cu	1.4401/Cu	1.4401/Cu	1.4401/Cu
Dimensions					
Height	mm	740	740	812	812
Width	mm	1022	1022	1152	1152
Depth	mm	524	524	524	524
Weights					
Weight	kg	62	62	91	91
Connections					
Connection, heating flow/return		22 mm	22 mm	22 mm	22 mm
Heating water quality requirements					
Water hardness	°dH	≤3	≤3	≤3	≤3
pH value (with aluminium fittings)		8.0-8.5	8.0-8.5	8.0-8.5	8.0-8.5
pH value (without aluminium fittings)		8.0-10.0	8.0-10.0	8.0-10.0	8.0-10.0
Conductivity (softening)	µS/cm	<1000	<1000	<1000	<1000
Conductivity (desalination)	µS/cm	20-100	20-100	20-100	20-100
Chloride	mg/l	<30	<30	<30	<30
Oxygen 8-12 weeks after filling (softening)	mg/l	<0.02	<0.02	<0.02	<0.02
Oxygen 8-12 weeks after filling (desalination)	mg/l	<0.1	<0.1	<0.1	<0.1
Values					
Heating flow rate (EN 14511) at A7/W35, B0/W35 and 5 K	m³/h	0.4	0.4	0.8	0.8
Nominal flow rate of heating system at A-7/W35 and 5 K	m³/h	0.55	0.70	1.34	1.34
Min. heating flow rate	m³/h	0.4	0.4	0.6	0.6
Nominal internal pressure drop, heating	hPa	75	122	149	149
Flow rate on heat source side	m³/h	1300	1300	2200	2200
Permissible operating pressure, heating circuit	MPa	0.3	0.3	0.3	0.3

Further details

		HPA-0 3 CS Plus	HPA-0 4 CS Plus	HPA-0 6 CS Plus	HPA-0 8 CS Plus
		238984	238985	238986	238987
Maximum altitude for installation	m	2000	2000	2000	2000

Guarantee

The guarantee conditions of our German companies do not apply to appliances acquired outside of Germany. In countries where our subsidiaries sell our products a guarantee can only be issued by those subsidiaries. Such guarantee is only granted if the subsidiary has issued its own terms of guarantee. No other guarantee will be granted.

We shall not provide any guarantee for appliances acquired in countries where we have no subsidiary to sell our products. This will not affect warranties issued by any importers.

Environment and recycling

We would ask you to help protect the environment. After use, dispose of the various materials in accordance with national regulations.

NOTES

NOTES

NOTES

Deutschland
STIEBEL ELTRON GmbH & Co. KG
Dr.-Stiebel-Straße 33 | 37603 Holzminden
Tel. 05531 702-0 | Fax 05531 702-480
info@stiebel-eltron.de
www.stiebel-eltron.de

Verkauf Tel. 05531 702-110 | Fax 05531 702-95108 | info-center@stiebel-eltron.de
Kundendienst Tel. 05531 702-111 | Fax 05531 702-95890 | kundendienst@stiebel-eltron.de
Ersatzteilverkauf Tel. 05531 702-120 | Fax 05531 702-95335 | ersatzteile@stiebel-eltron.de

Australia
STIEBEL ELTRON Australia Pty. Ltd.
6 Prohasky Street | Port Melbourne VIC 3207
Tel. 03 9645-1833 | Fax 03 9645-4366
info@stiebel.com.au
www.stiebel.com.au

Austria
STIEBEL ELTRON Ges.m.b.H.
Gewerbegebiet Neubau-Nord
Margaritenstraße 4 A | 4063 Hörsching
Tel. 07221 74600-0 | Fax 07221 74600-42
info@stiebel-eltron.at
www.stiebel-eltron.at

Belgium
STIEBEL ELTRON bvba/sprl
't Hofveld 6 - D1 | 1702 Groot-Bijgaarden
Tel. 02 42322-22 | Fax 02 42322-12
info@stiebel-eltron.be
www.stiebel-eltron.be

China
STIEBEL ELTRON (Tianjin) Electric Appliance Co., Ltd.
Plant C3, XEDA International Industry City
Xiqing Economic Development Area
300085 Tianjin
Tel. 022 8396 2077 | Fax 022 8396 2075
info@stiebeleltron.cn
www.stiebeleltron.cn

Czech Republic
STIEBEL ELTRON spol. s r.o.
K Hájům 946 | 155 00 Praha 5 - Stodůlky
Tel. 251116-111 | Fax 235512-122
info@stiebel-eltron.cz
www.stiebel-eltron.cz

Finland
STIEBEL ELTRON OY
Kapinakuja 1 | 04600 Mäntsälä
Tel. 020 720-9988
info@stiebel-eltron.fi
www.stiebel-eltron.fi

France
STIEBEL ELTRON SAS
7-9, rue des Selliers
B.P 85107 | 57073 Metz-Cédex 3
Tel. 0387 7438-88 | Fax 0387 7468-26
info@stiebel-eltron.fr
www.stiebel-eltron.fr

Hungary
STIEBEL ELTRON Kft.
Gyár u. 2 | 2040 Budaörs
Tel. 01 250-6055 | Fax 01 368-8097
info@stiebel-eltron.hu
www.stiebel-eltron.hu

Japan
NIHON STIEBEL Co. Ltd.
Kowa Kawasaki Nishiguchi Building 8F
66-2 Horikawa-Cho
Saiwai-Ku | 212-0013 Kawasaki
Tel. 044 540-3200 | Fax 044 540-3210
info@nihonstiebel.co.jp
www.nihonstiebel.co.jp

Netherlands
STIEBEL ELTRON Nederland B.V.
Daviottenweg 36 | 5222 BH 's-Hertogenbosch
Tel. 073 623-0000 | Fax 073 623-1141
info@stiebel-eltron.nl
www.stiebel-eltron.nl

Poland
STIEBEL ELTRON Polska Sp. z O.O.
ul. Działkowa 2 | 02-234 Warszawa
Tel. 022 60920-30 | Fax 022 60920-29
biuro@stiebel-eltron.pl
www.stiebel-eltron.pl

Russia
STIEBEL ELTRON LLC RUSSIA
Urzhumskaya street 4,
building 2 | 129343 Moscow
Tel. 0495 7753889 | Fax 0495 7753887
info@stiebel-eltron.ru
www.stiebel-eltron.ru

Slovakia
TATRAMAT - ohrievače vody s.r.o.
Hlavná 1 | 058 01 Poprad
Tel. 052 7127-125 | Fax 052 7127-148
info@stiebel-eltron.sk
www.stiebel-eltron.sk

Switzerland
STIEBEL ELTRON AG
Industrie West
Gass 8 | 5242 Lupfig
Tel. 056 4640-500 | Fax 056 4640-501
info@stiebel-eltron.ch
www.stiebel-eltron.ch

Thailand
STIEBEL ELTRON Asia Ltd.
469 Moo 2 Tambol Klong-Jik
Amphur Bangpa-In | 13160 Ayutthaya
Tel. 035 220088 | Fax 035 221188
info@stiebeleltronasia.com
www.stiebeleltronasia.com

United Kingdom and Ireland
STIEBEL ELTRON UK Ltd.
Unit 12 Stadium Court
Stadium Road | CH62 3RP Bromborough
Tel. 0151 346-2300 | Fax 0151 334-2913
info@stiebel-eltron.co.uk
www.stiebel-eltron.co.uk

United States of America
STIEBEL ELTRON, Inc.
17 West Street | 01088 West Hatfield MA
Tel. 0413 247-3380 | Fax 0413 247-3369
info@stiebel-eltron-usa.com
www.stiebel-eltron-usa.com

STIEBEL ELTRON

4 017213 321071

A 332107-41128-9437
B 332105-41128-9437

Irrtum und technische Änderungen vorbehalten! | Subject to errors and technical changes! | Sous réserve d'erreurs et de modifications techniques! | Onder voorbehoud van vergissingen en technische wijzigingen! | Salvo error o modificación técnica! | Excepto erro ou alteração técnica | Zastrzeżone zmiany techniczne i ewentualne błędy | Omyly a technické změny jsou vyhrazeny! | A muszaki változtatások és tévedések jogát fenntartjuk! | Отсутствие ошибок не гарантируется. Возможны технические изменения. | Chyby a technické zmeny sú vyhradené!

Stand 9375